JEAN MÜLLER
THE NAME FOR SAFETY

PRODUCTS & SYSTEMS FOR THE ELECTRICITY INDUSTRY

Catalogue

Version 20

VERTICAL FUSE DISCONNECTS

HORIZONTAL FUSE DISCONNECTS

FUSES + FUSE BASES

BUSBAR SYSTEMS

METERING SOLUTIONS

CABINETS

SHEAR HEAD BOLT CONNECTORS + LUGS

CURRENT TRANSFORMERS AND STANDOFF INSULATORS

POWER DISTRIBUTION BLOCKS

JEAN MÜLLER NZ Ltd.
Unit 2, 37 Hurlstone Drive
PO Box 907
New Plymouth 4340
NEW ZEALAND

Phone 06 769 9694
Fax 06 769 9696

Website www.jeanmueller.co.nz
Email sales@jeanmueller.co.nz

Welcome to the latest Edition of our catalogue. We are pleased to be in our 10th year as Jean Müller NZ and servicing our New Zealand and Pacific Island customers.

Please visit our web page - Products tab, for a downloadable pdf of this catalogue (includes printable sections). Retired products and catalogue information is available upon request.

For further information on any of our products please contact us.

Notes:

1. Unless otherwise indicated JEAN MÜLLER NZ Ltd will endeavour to maintain stock of all items in this catalogue.
2. Returned Goods should be addressed to:
   JEAN MÜLLER NZ Ltd
   Unit 2, 37 Hurlstone Drive
   NEW PLYMOUTH
   Attn: Returns

CONTENTS

		Page
JEAN MÜLLER	*About Us*	*2*
	Fuses	*4*
	Fuse bases *Technical Information* *Dimensions*	*15* *16* *23*
	Vertical fuse disconnects *Technical Information* *Dimensions*	*27* *36* *43*
	KETO *Technical Information* *Dimensions*	*50* *60* *68*
	Horizontal fuse disconnects *Technical Information* *Dimensions*	*78* *87* *89*
	Busbar systems *Technical Information* *Dimensions*	*95* *102* *103*
	Cabinets *Dimensions*	*106* *112*
	Metering solutions	*116*
ENSTO	*Shear head bolt connectors and lugs* *Dimensions*	*117* *126*
MBS	*Current transformers and standoff insulators* *Technical Information* *Dimensions*	*120* *122* *125*
FTG	*Power distribution blocks* *Technical Information*	*121* *122*
Terms and Conditions of Trade		*127*

JEAN MÜLLER was founded in 1897 in the village of Eltville on the banks of the Rhine River in Germany.

At this time the applications for electricity were still in their early days. Jean Müller chose as its basic activity the development of fuses.

Today the company has more than six hundred employees and works with modern production methods to produce fused switchgear, low voltage switchgear assemblies, current distribution components, electronic monitoring systems and energy management systems.

The combination of specialist knowledge of the electrical supply industry and the experience of a company that has been growing for more than 100 years means that JEAN MÜLLER is

THE NAME FOR SAFETY

Since the year 2000, JEAN MÜLLER has been represented in New Zealand by EMF Industrial Ltd however in March 2011 EMF Industrial became JEAN MÜLLER NZ Ltd, a fully owned subsidiary of Jean Müller GmbH.

Products

Our tried and tested products comply with the international IEC standards and with the relevant national standards. They are manufactured in conformity with the highest quality requirements, and our quality management is certified according to DIN EN ISO 9001.

Solutions

Our profession is the development and manufacture of products suitable for the entire electrical power distribution system in industry, within the power supply grid and in buildings. We also provide customized solutions for specific customer applications.

Service

We offer to our customers specialised technical consulting tailored to their specific applications. Our more than 100 years of experience and technical know-how, including knowledge of specific national requirements worldwide, provide a solid basis of competence that spans from the consulting phase to manufacture and subsequent customer service.

We remain permanently available to our customers by means of our extensive service network - in Germany, Europe and other countries of the world. The data sheets, the dxf drawings and the product news are available for you around-the-clock on your homepage

www.jeanmueller.de.

Current distribution for industrial applications

Our current distribution components are used for electrical power supply in industrial applications, large buildings, office centres, factories, ships, airports and everywhere where protection against overload is essential.

For switchgear and controlgear panel builders, we are setting new standards with our SASIL and COSMO distribution systems.

Power distribution for electricity supply companies

The “Power Distribution” product line covers all the requirements of electricity supply companies world-wide. The field of application is the public power supply system, including current distribution all the way from power station to house service connection.

System electronics

Our “Powerlizer” product family provides system electronics for energy management. The “Powerlizer” range covers the full spectrum of products required for the acquisition, display, monitoring and evaluation of measurement data in the field of power distribution for industrial applications and the public power supply network.

DIN-fuse-links

DIN fuse-links are used for the protection of electrical installations and equipment and are common for a wide area of applications.

Standardised characteristics, technical data and dimensions offer adapted solutions without complex individual calculations.

Utilisation category gG 500VAC with combi indicator

Notes: DIN000 Fuses are suitable for mounting in DIN00 holders

SM000

SM00

SM1

SM2

SM3

SM4A

Size	Rating (A)	Power Dissipation (W)	Part No.
DIN 000	4A		SM000-GL/004
	6A		SM000-GL/006
Refer Notes	10A		SM000-GL/010
	16A		SM000-GL/016
	20A		SM000-GL/020
	25A		SM000-GL/025
	32A		SM000-GL/032
	35A		SM000-GL/035
	40A		SM000-GL/040
	50A		SM000-GL/050
	63A		SM000-GL/063
	80A		SM000-GL/080
	100A		SM000-GL/100
DIN 00	125A		SM00-GL/125
	160A		SM00-GL/160
DIN 1	63A		SM1-GL/063
	80A		SM1-GL/080
	100A		SM1-GL/100
	125A		SM1-GL/125
	160A		SM1-GL/160
	200A		SM1-GL/200
	224A		SM1-GL/224
	250A		SM1-GL/250
DIN 2	63A		SM2-GL/063
	80A		SM2-GL/080
	100A		SM2-GL/100
	125A		SM2-GL/125
	160A		SM2-GL/160
	200A		SM2-GL/200
	250A		SM2-GL/250
	315A		SM2-GL/315
	355A		SM2-GL/355
	400A		SM2-GL/400
DIN 3	315A		SM3-GL/315
	400A		SM3-GL/400
	500A		SM3-GL/500
	630A		SM3-GL/630
	800A		SM3-GL/800
DIN 4a	250A		SM4A-GL/250
	315A		SM4A-GL/315
	400A		SM4A-GL/400
	500A		SM4A-GL/500
	630A		SM4A-GL/630
	800A		SM4A-GL/800
	1000A		SM4A-GL/1000
	1250A		SM4A-GL/1250
	1600A		SM4A-GL/1600

SM00-GL/125K

Utilisation category gG 500VAC with striker

Size	Rating (A)	Power Dissipation (W)	Part No.
DIN 000	6A		SM000-GL/006K
	10A		SM000-GL/010K
	16A		SM000-GL/016K
	20A		SM000-GL/020K
	25A		SM000-GL/025K
	32A		SM000-GL/032K
	40A		SM000-GL/040K
	50A		SM000-GL/050K
	63A		SM000-GL/063K
	80A		SM000-GL/080K
	100A		SM000-GL/100K
DIN 00	125A		SM00-GL/125K
	160A		SM00-GL/160K
DIN 1	100A		SM1-GL/100K
	125A		SM1-GL/125K
	160A		SMI-GL/160K
DIN 1	200A		SM1-GL/200K
	250A		SM1-GL/250K
DIN 2	315A		SM2-GL/315K
	400A		SM2-GL/400K
DIN 3	500A		SM3-GL/500K
	630A		SM3-GL/630K

SM2-UF/315

Utilisation category aR 690VAC - üf1 (very fast acting)

Size	Rating (A)	Power Dissipation (W)	Part No.
DIN 000	16A		SM000-UF/016
	20A		SM000-UF/020
	25A		SM000-UF/025
	32A		SM000-UF/032
	40A		SM000-UF/040
	50A		SM000-UF/050
	63A		SM000-UF/063
	80A		SM000-UF/080
	100A		SM000-UF/100
	125A		SM000-UF/125
	160A		SM000-UF/160
DIN 1	200A		SM1-UF/200
	250A		SM1-UF/250
DIN 2	315A		SM2-UF/315
	400A		SM2-UF/400
DIN 3	500A		SM3-UF/500
	630A		SM3-UF/630

TRANSFORMER FUSE RANGE

SM3-GTR/910

NH fuse-links utilization category gTr for transformer protection 400VAC

Size	Rating (A)	Sn (kVA)	Blow Indicator	Power Dissipation (W)	Part No.
DIN 2	144A	100	Top	9.5	SM2-TT/145
DIN 2	289A	200	Top	18.8	SM2-TT/289
DIN 3	455A	315	Top	30.5	SM3-TT/455
DIN 3	722A	500	Top	49	SM3-GTR/722
DIN 3	909A	630	Top	58	SM3-GTR/910
DIN 4a	722A	500	Top	50.5	SM4A-TT/722
DIN 4a	909A	630	Top	61	SM4A-TT/910
DIN 4a	1443A	1000	Top	98	SM4A-TT/1443

M**aM**

Utilization category aM for motor protection 690V Combi Indicator

Size	Rating (A)	Power Dissipation (W)	Part No.
DIN 000	2A		SM000-aM/002/69
	4A		SM000-aM/004/69
	6A		SM000-aM/006/69
	10A		SM000-aM/010/69
	16A		SM000-aM/016/69
	20A		SM000-aM/020/69
	25A		SM000-aM/025/69
	32A		SM000-aM/032/69
	35A		SM000-aM/035/69
	40A		SM000-aM/040/69
DIN 00	50A		SM00-aM/050/69
	63A		SM00-aM/063/69
	80A		SM00-aM/080/69
	100A		SM00-aM/100/69
	125A		SM00-aM/125/69
	160A		SM00-aM/160/69
DIN 1	63		SM1-aM/063/69
	80		SM1-aM/080/69
	100		SM1-aM/100/69
	125		SM1-aM/125/69
	160		SM1-aM/160/69
	200		SM1-aM/200/69
	224		SM1-aM/224/69
	250		SM1-aM/250/69
DIN 2	160		SM2-aM/160/69
	200		SM2-aM/200/69
	224		SM2-aM/224/69
	250		SM2-aM/250/69
	300		SM2-aM/300/69
	315		SM2-aM/315/69
	355		SM2-aM/355/69
	400		SM2-aM/400/69
DIN 3	400		SM3-aM/400/69
	425		SM3-aM/425/69
	500		SM3-aM/500/69
	630		SM3-aM/630/69
DIN 4a	800		SM4a-aM/800/69
	1000		SM4a-aM/1000/69

Solid links 690VAC

TM

Size	Rating (A)	Gripping Lugs	Power Dissipation (W)	Part No.
DIN 00	160A	Insulated	2.0	TM00-ISM
DIN 1	250A	Insulated	5.0	TM1-ISM
DIN 2	400A	Insulated	10.0	TM2-ISM
DIN 3	630A	Insulated	21.0	TM3-ISM
	1250A	Insulated	24.0	TM3-1250-ISM
DIN 4a	1250A	Live	21.0	TM4A-1250
	1600A	Live	22.0	TM4A-1600

Accessories

GPSHE

GP 1200

HP-SE/L

Description	Part No.
For fitting and removal of DIN 000, 00, 1, 2, 3 fuse links	GPSHE
NH Fuse Handle for inserting and removing of NH fuse-links sizes NH1, NH2, NH3, NH1XL, NH2XL and NH3L, as well as solid links and fuse-base covers.	GP 1200
Piggy Bank Fuse Adaptor for temporary power supply 100 amp max	HP-SE/L

D-Type fuse links utilisation category gG 500VAC

GLD

Size	Rating (A)	For thread	Power Dissipation (W)	Part No.
DII	10A	E27	2.1	GLD2/10
	16A	E27	2.5	GLD2/16
	20A	E27	2.6	GLD2/20
	25A	E27	3.3	GLD2/25
DIII	35A	E33	4.4	GLD3/35
	50A	E33	6.0	GLD3/50
	63A	E33	6.2	GLD3/63

22 X 58 Cylindrical fuse links (house service fuses) gG

SKR

Size	Rating (A)	Voltage	Power Dissipation (W)	Part No.
22 x 58mm	32A	690V	3.7	SKR-GL/032
22 x 58mm	40A	690V	4.5	SKR-GL/040
22 x 58mm	50A	690V	5.2	SKR-GL/050
22 x 58mm	63A	690V	6.9	SKR-GL/063
22 x 58mm	80A	690V	7.8	SKR-GL/080
22 x 58mm	100A	690V	8.6	SKR-GL/100

10 X 38 CYLINDRICAL FUSES

Z type gG 400/500 VAC

Z10

Size	Rating (A)	Voltage	Part No.
10 x 38mm	2A	AC500V	Z10GL2
10 x 38mm	4A	AC500V	Z10GL4
10 x 38mm	6A	AC500V	Z10GL6
10 x 38mm	10A	AC500V	Z10GL10
10 x 38mm	12A	AC500V	Z10GL12
10 x 38mm	16A	AC500V	Z10GL16
10 x 38mm	20A	AC400V	Z10GL20/4
10 x 38mm	25A	AC400V	Z10GL25/4
10 x 38mm	32A	AC400V	Z10GL32/4

Z type PV 1000 VDC

Z10DC

Size	Rating (A)	Voltage	Part No.
10 x 38mm	2A	DC1000V	Z10DC2/1000V
10 x 38mm	4A	DC1000V	Z10DC4/1000V
10 x 38mm	6A	DC1000V	Z10DC6/1000V
10 x 38mm	10A	DC1000V	Z10DC10/1000V
10 x 38mm	12A	DC1000V	Z10DC12/1000V
10 x 38mm	16A	DC1000V	Z10DC16/1000V
10 x 38mm	20A	DC1000V	Z10DC20/1000V
10 x 38mm	25A	DC1000V	Z10DC25/1000V

Z type PV cylindrical fuse disconnector

Z10-TL

Size	Rating (A)	Voltage	Indicator	Part No.
1 pole	20A	DC1000V	None	Z10-TL1/DC1000V
2 pole	20A	DC1000V	None	Z10-TL2/DC1000V
1 pole	20A	DC1000V	LED	Z10-TL1/DC1000V LED
2 pole	20A	DC1000V	LED	Z10-TL2/DC1000V LED

NH metering fuse-links

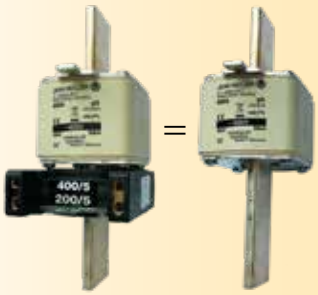

Truncated size with additional feature

- Truncated isolating body with rated voltage AC400V
- Dimensions in conjunction with attached current transformer

Attachable current transformers

- Dedicated current transformers offer two measuring ranges
- Current transformers allow open-ended operation

Bimetallic current meters

- Dedicated bimetallic current meters with two measuring ranges and slave pointer

Application in switchgear

- JEAN MÜLLER fuse disconnects are prepared to accept metering fuse-links

Metering fuse links utilisation category gG 400VAC

	Size	Rating (A)	Power Dissipation (W)	Part No.
	DIN2	200	12.0	SMCT2-GL/200
		250	17.0	SMCT2-GL/250
		315	20.0	SMCT2-GL/315
		400	24.0	SMCT2-GL/400
	DIN3	400	24.0	SMCT3-GL/400
		630	32.0	SMCT3-GL/630

Current transformers for metering fuse links

Size	Primary Current (A)	Secondary Current (A)	Power (VA)	Class	Part No.
DIN2	400/200	5	5/3.5	3	MSMK2/400/5
DIN3	400/200	5	5/3.5	3	MSMK3/400/5
DIN3	600/300	5	5/3.5	3	MSMK3/600/5
Circlip for securing CTs					SIBZ-R

Bimetallic meters for metering fuse links (MDIs)

	Size	Scale (A)	Measuring Range (A)	Part No.
	DIN 1,2,3	400/200	0-5	SL-MDI-400
	DIN 1,2,3	600/300	0-5	SL-MDI-600

NH fuse-links for DC applications

Compact dimensions DC80V

- High current carrying capacity up to 800A
- Compact size NH00
- Suitable NH fuse-switch-disconnectors available

Compact dimensions DC250V

- High current carrying capacity up to 315A
- Compact size NH00
- Suitable NH fuse-switch-disconnectors available

Various applications

- DC80V especially for short circuit protection in power supply systems for telecommunication
- DC250V and DC440V for protection against overload and short circuit in common DC applications

DIN00 fuse links 80VDC for telecommunication applications

	Size	Rating (A)	Power Dissipation (W)	Part No.
	DIN00	100	8.0	SM00-DC100
		160	9.0	SM00-DC160
		250*	12.0	SM00-DC250
		400*	18.0	SM00-DC400
		630*	28.0	SM00-DC630
		800*	39.0	SM00-DC800

DIN00 fuse links 250VDC

	Size	Rating (A)	Power Dissipation (W)	Part No.
	DIN00	63	7.5	SM00-DC063/250
		100	9.4	SM00-DC100/250
		160	13.8	SM00-DC160/250
		200*	18.9	SM00-DC200/250
		250*	21.2	SM00-DC250/250
		315*	23.5	SM00-DC315/250

* only for use with JEAN MÜLLER fuse disconnects type LTT.

Fuse bases for DIN fuses

Size	For Fuses	Current Rating (A)	Terminal	Connection Capacity (mm²)	Part No.
00	DIN000 & DIN00	160	Flat Terminal M8	max. 95	U00-1lGZ/H
1	DIN1	250	Flat Terminal M10	max. 150	U1-1lGZ/H
2	DIN2	400	Flat Terminal M12	max. 240	U2-1lGZ/H

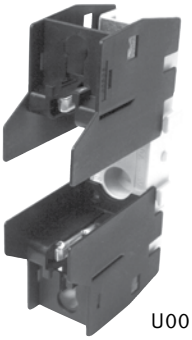
U00

U1

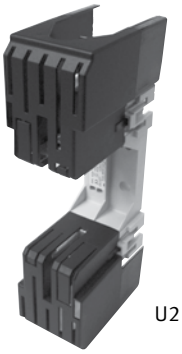
U2

Fuse bases for cylindrical fuses

For Fuses	Current Rating (A)	Switch width (mm)	Terminal	Connection Capacity (mm²)	Part No.
10 x 38mm	32	18	Clamp	0.75 - 25	WH-AMB1/10
10 x 38mm	32	54	Clamp	0.75 - 25	WH-AMB3/10
22 x 58mm	100	36	Clamp	4 - 50	WH-AMB1/22
22 x 58mm	100	108	Clamp	4 - 50	WH-AMB3/22

WH-AMB1/10

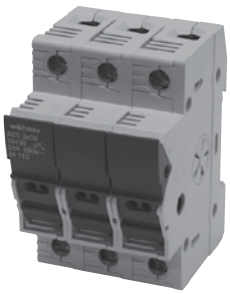
WH-AMB3/10

WH-AMB1/22

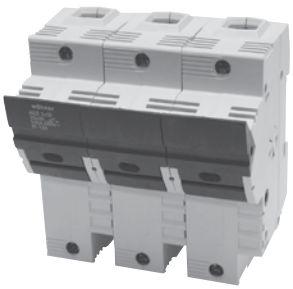
WH-AMB3/22

TECHNICAL INFORMATION

Type	Standard DIN and Striker Fuses	Semiconductor Fuses	Motor Rated Fuses	CT Mount Fuses	D-Type Fuses	Cylindrical House Service Fuses
Reference	SM...-GL/... SM...-GL/...K	SM...-UF/...	SM...-AM/...	SMCT...-GL/...	GLD...-	SKR...
Utilisation	Cable and Line protection	Semiconductor protection	Motor protection	Cable and Line protection	Cable and Line protection	Cable and Line protection
Protection Type	Full Range	Short Circuit only	Short Circuit only	Full Range	Full Range	Full Range
Characteristic	gG	aR	aM	gG	gG	gG
Rated Voltage	500 VAC	690 VAC	690 VAC	400 VAC	500 VAC	690 VAC (100A 500V) (125A 400V)
Maximum Voltage	500 VAC	725 VAC	725 VAC			
Rated Breaking Capacity						
at 500 VAC	120 kA	100 kA	120 kA NH000/100KA	50 kA	50 kA	
Construction						
Body		Steatite Ali - oxide ceramic for semi-condutor fuses			-	-
Blade Contacts		Silver Plated Copper Alloy or Copper			-	-
Fuse Element		Silver or Copper melting element			-	-
Fuse Blown Indication		Combi/top indicator			None	None

Type			M2GTR(TT) ...	M3GTR(TT) ...		
Size	-	-	NH2	NH3		
Rated voltage	U_n	V	AC400	AC400		
Rated current	I_n	A	72-361	72-361	455-577	722-909
Transformer rating	S_n	kVA	50-250	50-250	315-400	500-630
Rated breaking capacity	-	kA	100	100		
Utilization category	-	-	gTr	gTr		
Standards	-	-	IEC/EN 60269-1 DIN VDE 0636-2011			

Notes :
Characteristics/Standards
gG IEC60269
aR IEC60269-4

Fuses for motor protection

1. Fuses with aM characteristic
   The rated fuse current must be ≥ rated motor current.

2. Fuses with gG characteristic
   The following table shows fuse ratings for short circuit protection of 3 phase motors, 1500 rpm and internal or surface cooling

Direct Starting : max start current 6 x rated motor current, max start time 5 seconds
Star/Delta Starting : max start current 2 x rated motor current, max start time 15 seconds
Ratings for Star/Delta starting also apply for 3 phase slip-ring motors

Motor Rating @ 400V				Fuse Rating aM (Amps)	Fuse Rating gG (Amps)	
kW	cos ø	Eff %	Rated Motor Current Amps	D.O.L Start	D.O.L Start	Star-Delta Start
0.18	0.7	62	0.6	2	2	-
0.25	0.7	62	0.83	2	4	2
0.55	0.75	69	1.5	2	4	2
0.75	0.8	74	1.8	4	6	2
1.1	0.83	77	2.5	4	6	4
2.2	0.83	81	4.7	6	10	6
3.0	0.84	81	6.4	10	16	10
4.0	0.84	82	8.4	10	20	10
7.5	0.86	85	14.8	16	32	16
11	0.86	87	21.2	25	50	25
15	0.86	87	28.9	32	63	32
22	0.87	89	41	50	80	50
30	0.87	90	55	63	100	63
37	0.87	90	68	80	125	80
55	0.88	91	99	125	200	100
75	0.88	91	135	160	200	160
90	0.88	92	160	200	250	160
110	0.88	92	196	250	315	200
132	0.88	92	235	250	400	250
160	0.88	93	282	315	400	315
200	0.88	93	353	400	500	400

HRC DIN Fuses

NH fuse-links for general protection

NH000-NH00

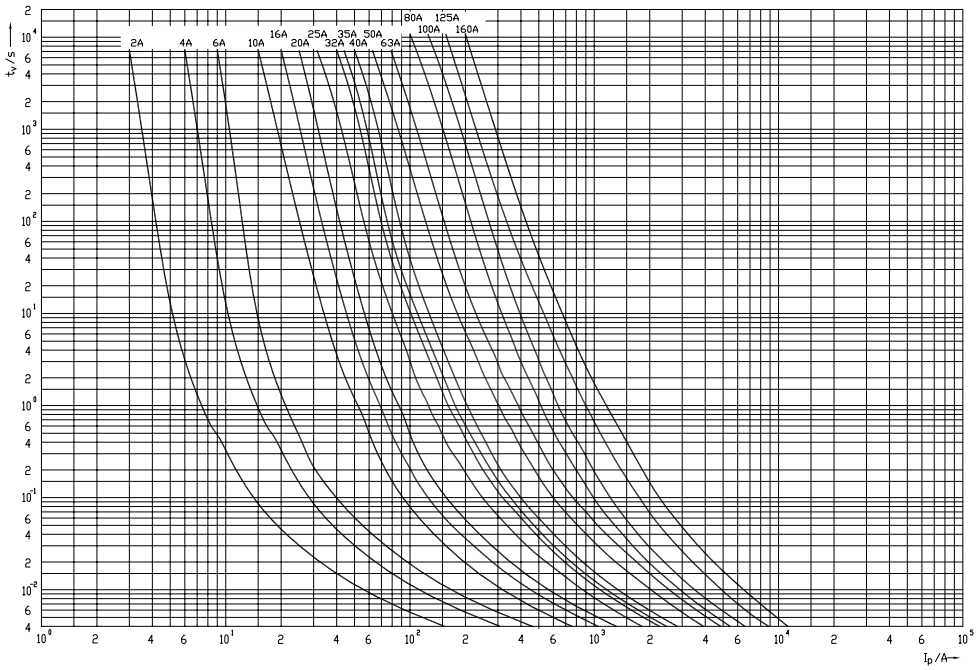

NH1+2

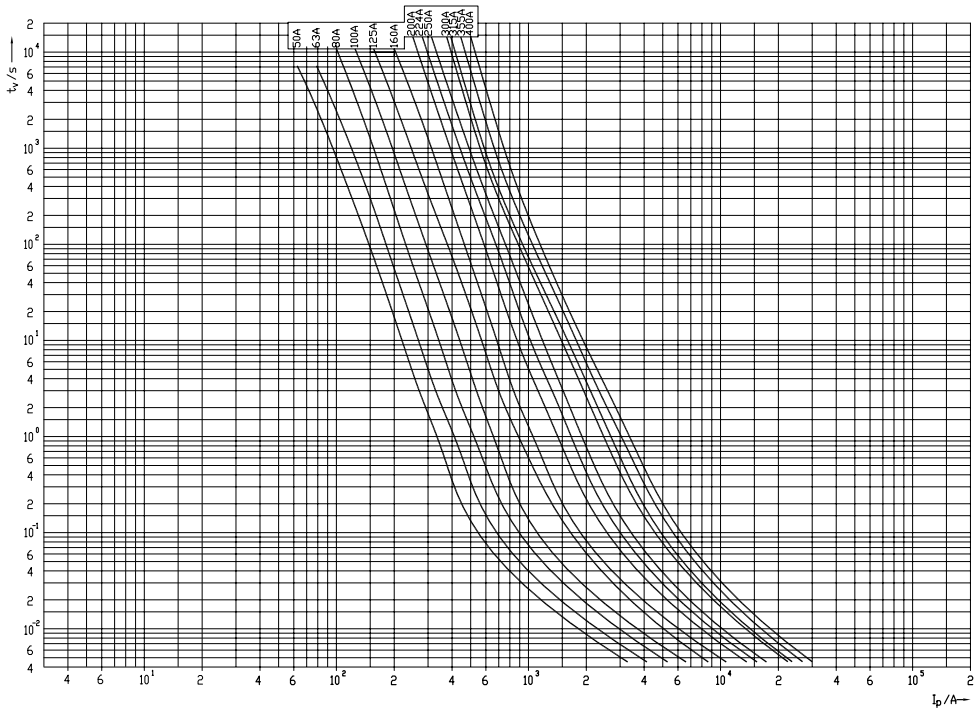

HRC DIN Fuses

Time/current characteristics curves

NH3

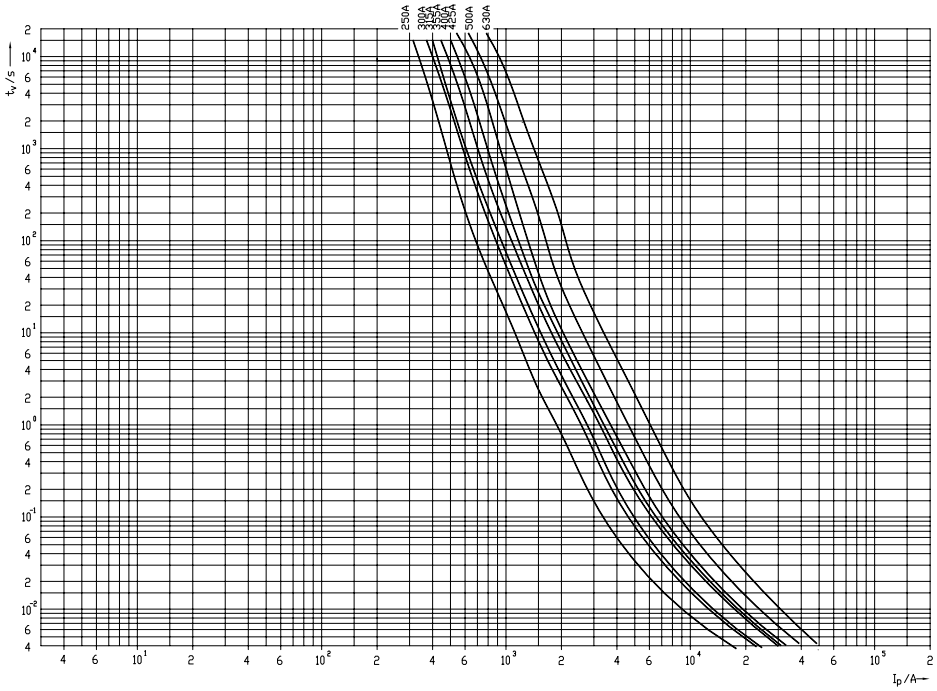

NH4a

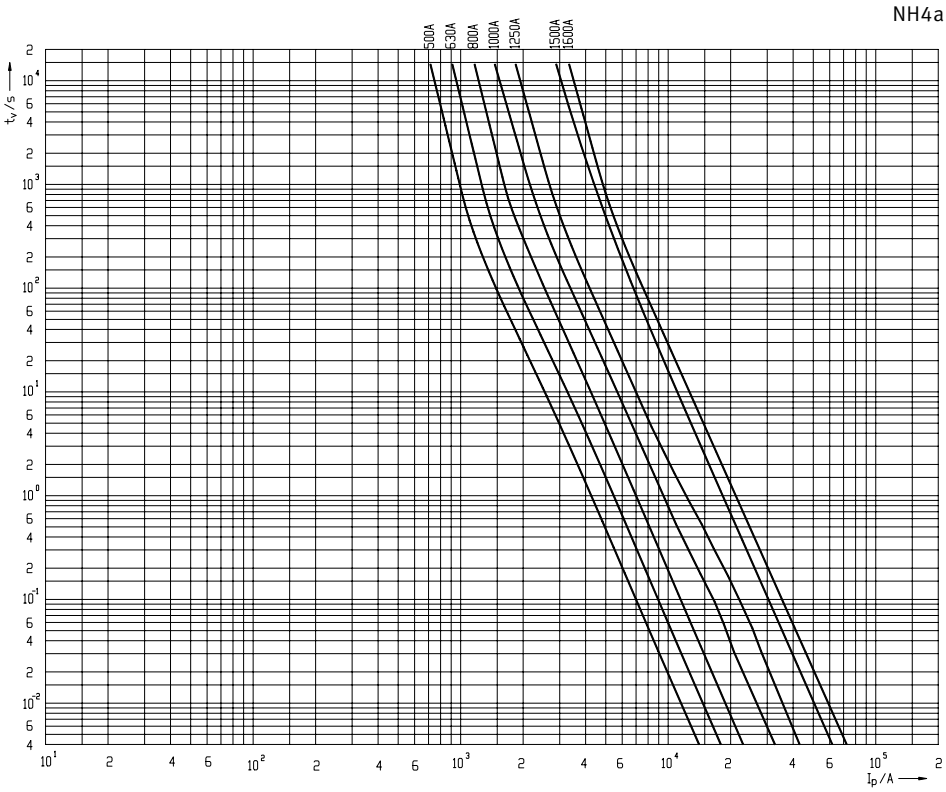

HRC DIN Fuses

Time/current characteristics üf1

Very fast acting

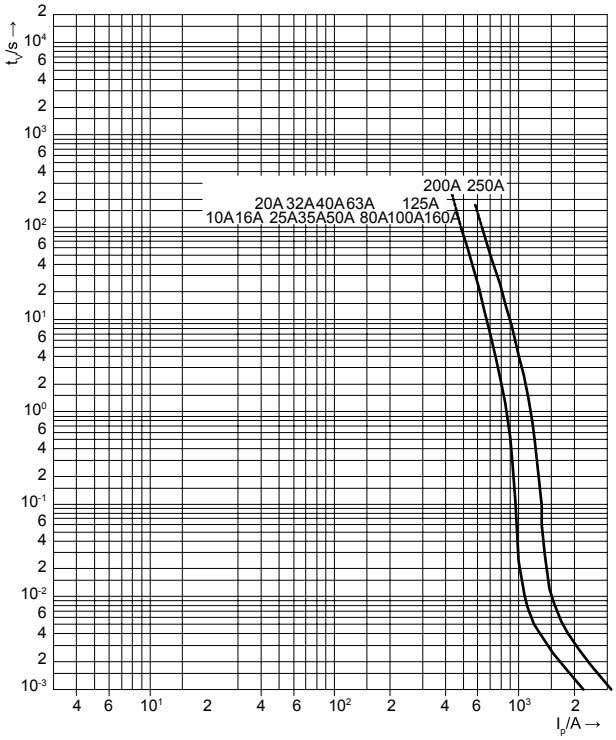

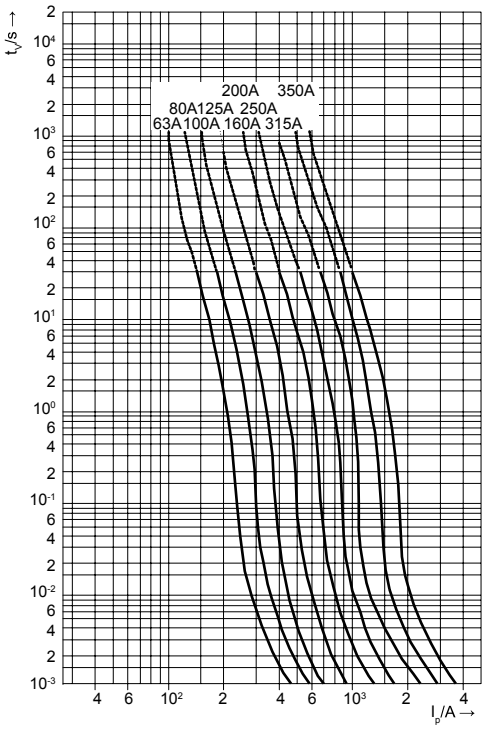

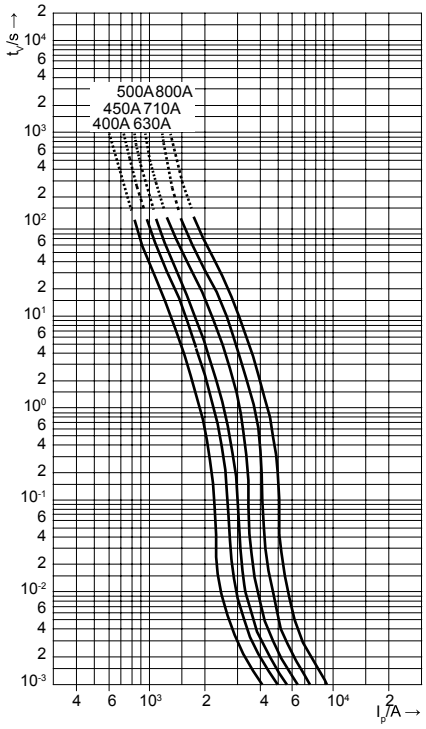

HRC DIN Fuses

Time/current characteristics gTr

Transformer range

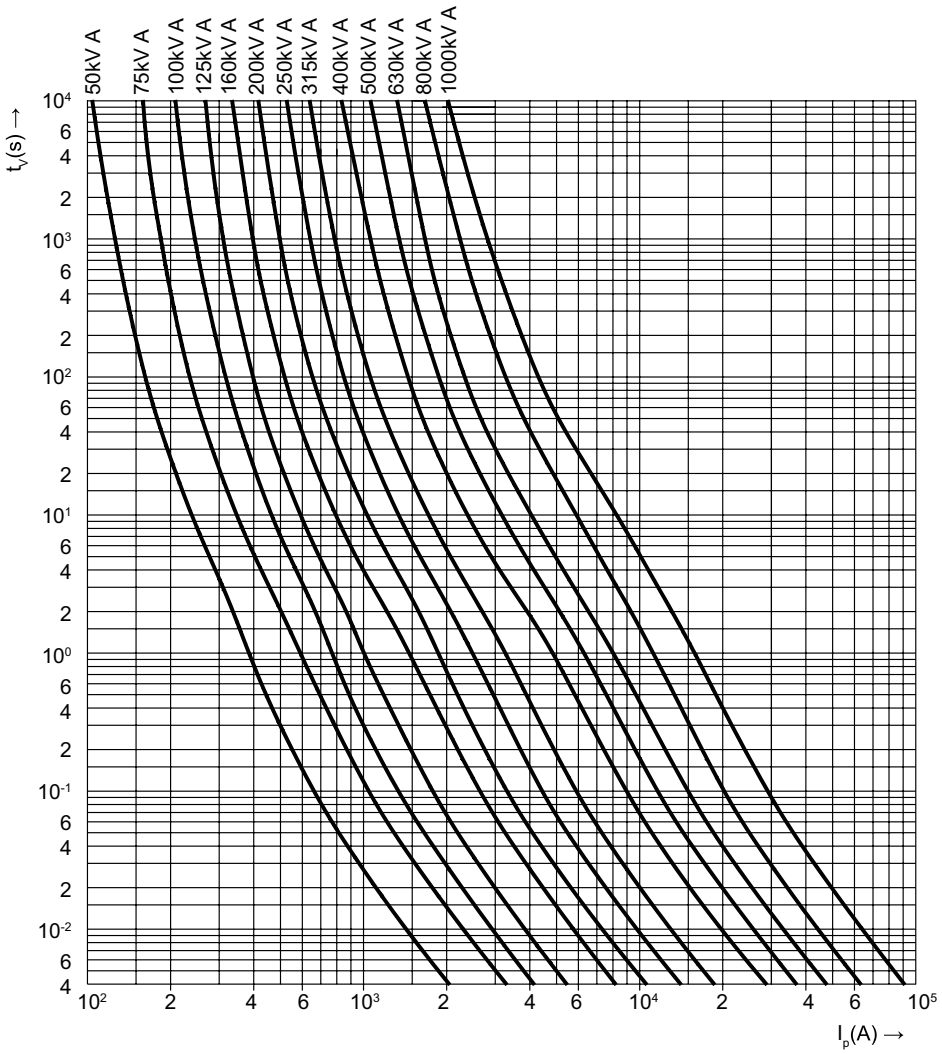

HRC DIN Fuses

Time/current characteristics gaM

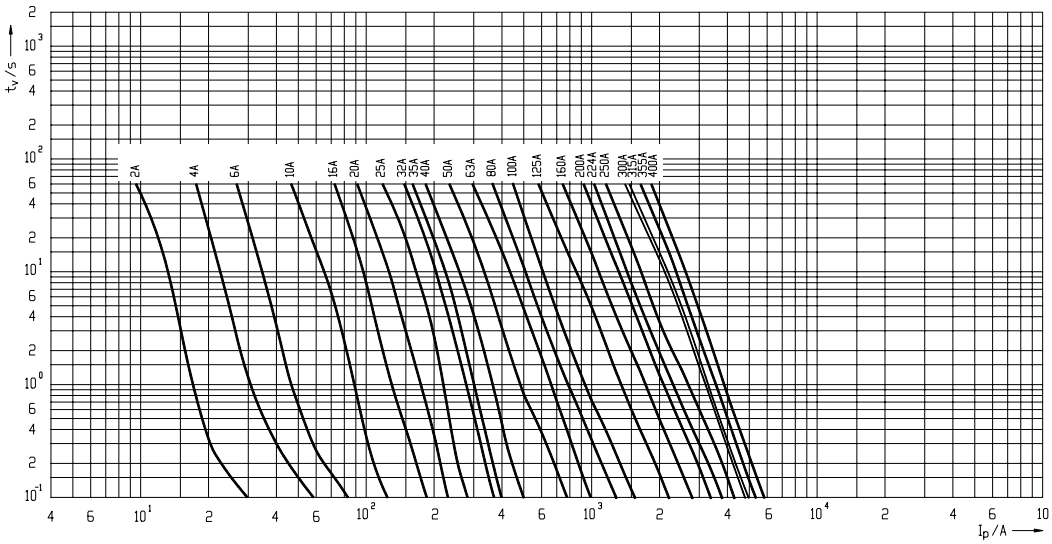

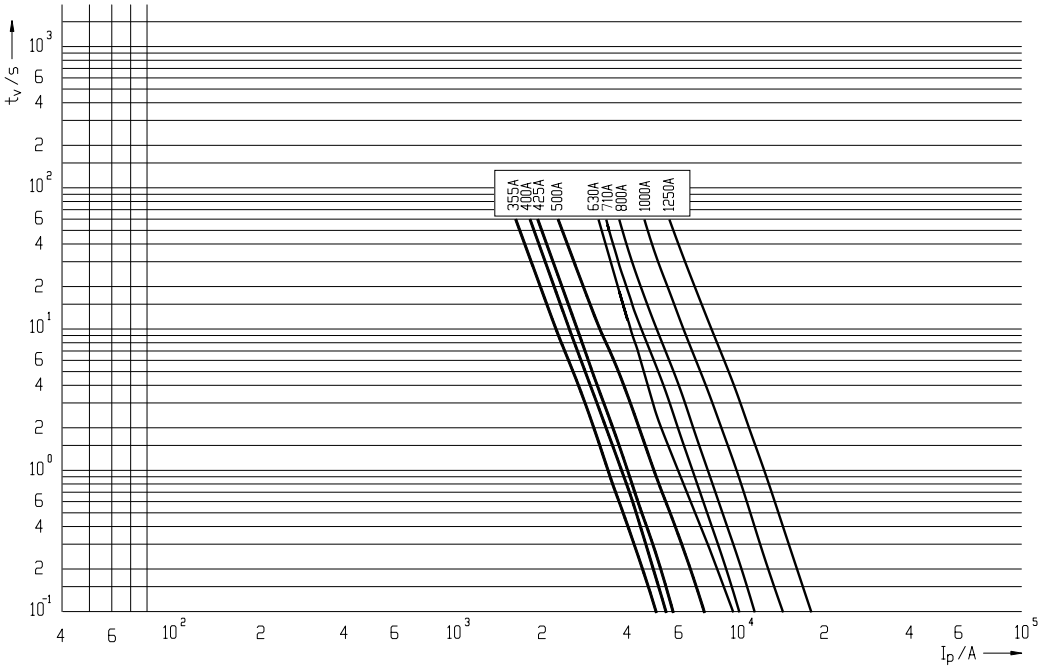

DIMENSIONS

HRC fuses/ Striker fuses/aM fuses/Semiconductor

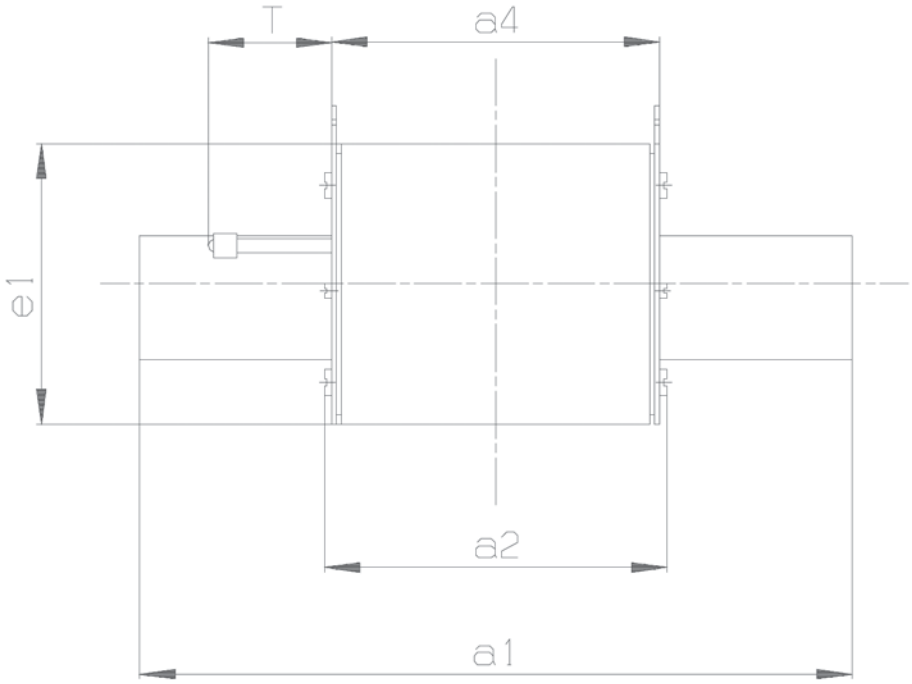

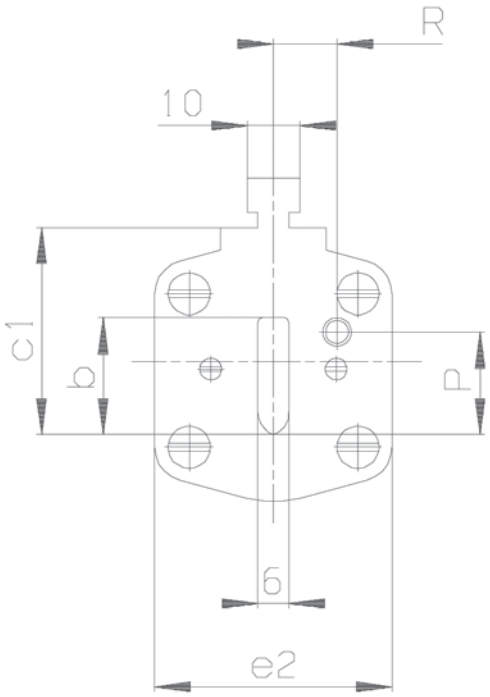

Gg fuses 500V

Type	SM000	SM00	SM1		SM2		SM3			SM4a	
A	**4-100**	**125-160**	**6-160**	**200-250**	**50-250**	**315-400**	**50-400**	**425-500**	**630**	**50-1000**	**1250-1600**
a1	78,5	78,5	135	135	150	150	150	150	150	200	200
a2	53	53	68	72	72	72	72	72	72	87	87
a4	50	50	67	67	67	67	67	67	67	90	90
b	15	15	15	20	20	26	26	32	37	50	50
c1	35	35	40	40	48	48	60	60	60	85	85
e1	40	47	50	55	50	59	59	69	69	95	106
e2	21	29	28	46	46	54	54	64	64	87	95
Striker fuses only											
T	17	17	26		*	26	*	26	26	26	26
R	0	0	13,7		*	16,2	*	17	17	24	24
P	20,5	20,5	20.5		*	27.3	*	35,6	35,6	49	49

Dimensions in mm
* Striker types (K) always have dimensions of the respective size

Semi conductor fuses 690V

Type	SM000	SM1	SM2	SM3
A	**10-160**	**6-250**	**50-400**	**50-630**
a1	78	135	150	150
a2	55	72	72	72
a4	48	65	65	65
b	15	24	30	37
c1	35	40	48	60
e1	49	52	61	74
e2	27	46	54	64

Dimensions in mm

aM fuses 690V

Type	SM000	SM00	SM1	SM2	SM3
A	**16-63**	**80-160**	**125-250**	**200-400**	**500-630**
a1	78.5	78.5	135	150	150
a2	53	53	72	72	72
a4	50	50	67	67	67
b	15	15	20	26	37
c1	35	35	40	48	60
e1	40	47	49	58	73
e2	21	29	46	54	73

Dimensions in mm

Type			M2GTR(TT) ...	M3GTR(TT) ...		
Dimensions	a1	mm	150	150	150	150
	a2		72	72	72	73
	a4		67	67	67	67
	b1		26	26	33	37
	c1		48	60	60	60
	e1		63	74	74	76
	e2		54	54	65	73
Weight	-	g	500	510	923	940

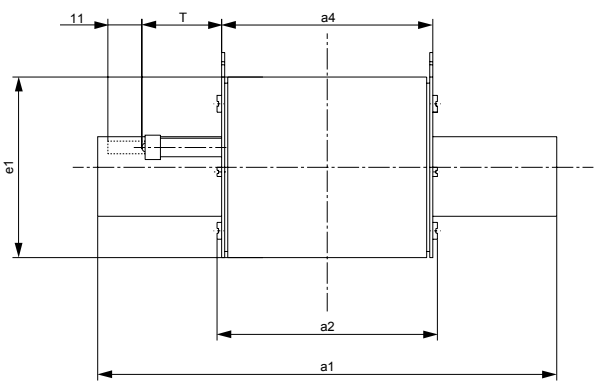

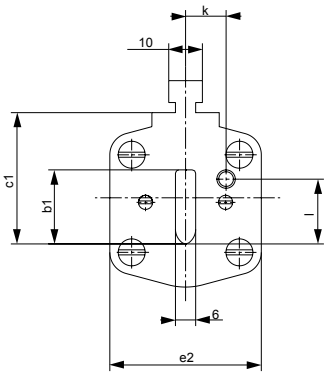

Solid link

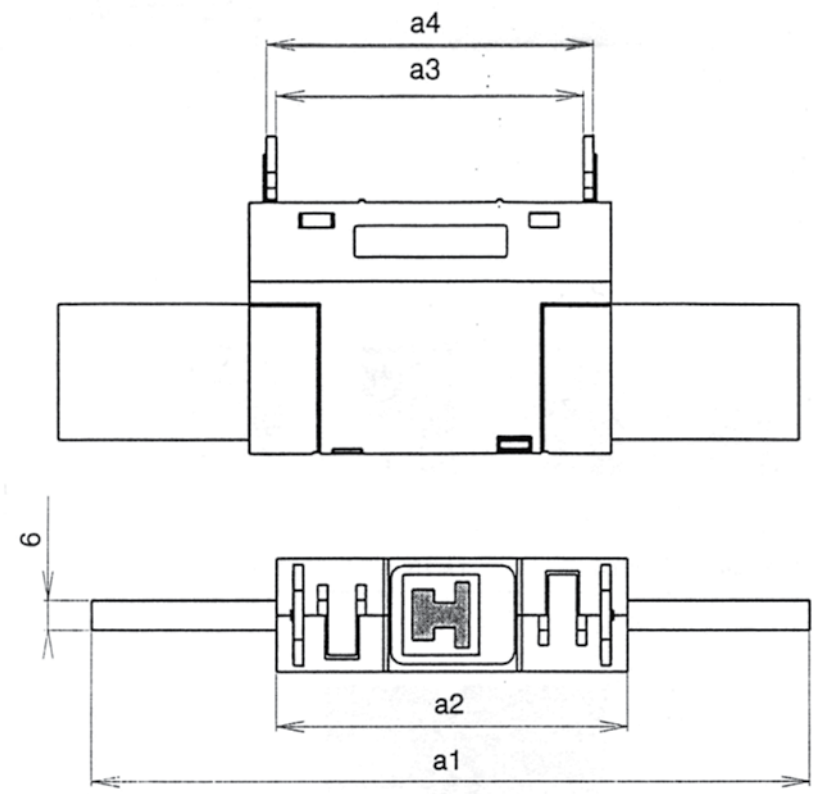

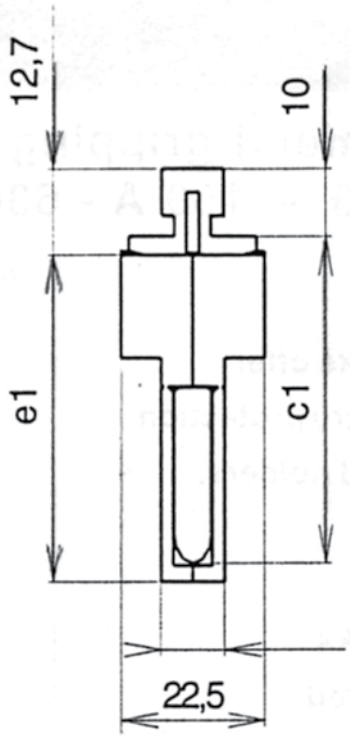

DIN size	a1	a2	a3	a4	c1	e1
TM00-ISM	80	54	44.4	48.4	35	36
TM1-ISM	135	73.5	62.4	66.4	40	48.2
TM2-ISM	150	73.5	62.4	66.4	48	56.2
TM3-ISM	150	73.5	62.4	66.4	60	68.2

Notes

Vertical fuse disconnects

Vertical fuse disconnects

Vertical fuse disconnects are designed to receive NH fuse links. Hinged fuse-carriers enable opening and closing operation in electric circuits under load conditions. Thereby, the fuse-link or solid link forms the moving contact. Both, single pole and three-pole switching is possible.

Vertical fuse disconnects are used in Transformer stations and cable distribution cabinets of public utilities as well as low voltage switchgear and controlgear assemblies acc. to IEC/EN 61439-1. Their closed design and high breaking capacity make them extremely reliable and powerful fuse-combination units.

Product definition

Vertical fuse disconnects are three-pole fuse-switches for busbar mounting. They combine three single-pole fuse-switches longitudinally arranged in one unit. Each of the feeder terminals is directly connected to one phase of a three-phase busbar system. The outgoing terminals are equipped with terminals for cable conductors.

Applications

Vertical fuse disconnects conform to the requirements of public utilities and industrial companies for power distribution boards in ring main units, transformer substations, cable distribution cabinets as well as main distribution boards. Vertical fuse disconnects having built-in current transformers are essential devices for efficient energy management. With built-in fuse monitoring function they ensure short reaction time even in decentralized power distribution systems.

Product advantages

JEAN MÜLLER vertical fuse disconnects are available in sizes 00 to 3 for both single pole and three-pole switching operation. Product versions with built-in current transformers, feeder units up to 2000A rated current, and a wide range of specially designed products enable efficient and reliable power distribution.

Insulation parts

All insulating parts are made of high mechanical strength polymers are resistant to breaking, self extinguishing and halogen-free. The fuse-base insulator for 185mm busbar systems, which supports the current carrying parts, is made of high stability glass fibre reinforced thermosetting polyester, according to power utility specifications.

Current carrying parts

Silver-plated receiving contacts for DIN fuse-links ensure low power loss, optimum temperature behaviour and high breaking capacity. The tin-plated down leads are available with different types of terminals.

Thanks to the contact covers that provide safety from touch by the back of the hand, the products can be mounted on live busbar systems, provided the local safety rules allow for. The upper parts of vertical fuse disconnects including the fuse carriers can be easily mounted and fixed by means of turn-lock fasteners.

Product versions/Accessories

The products prepared for current transformers can be equipped with specifically designed current transformers inserted in the base insulator. Current transformers are available for primary currents ranging from 50A to 1000A.

SL00-3X3/100/F/HA

SL00-3X3/185/F

SL1G-3X3/3A
SL2G-3X3/3A
SL3-3X3/3A

SL3-3X3/1000HA

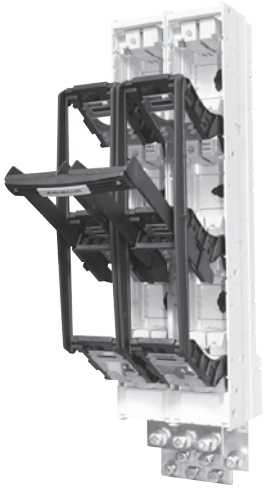

SL3-3X6/1250/HA

SL00-3X/100/F/HA

SL00-3X/185/F

SL1G-3X/3A
SL2G-3X/3A
SL3-3X/3A

SL3-3X/1000HA

SL3-3X/910/HA

SL3-3X2/1250/HA

Terminal covers (sold separately) are required for all disconnects (refer to page 35)

Vertical fuse disconnects 3 pole switching in one action

Size	For Fuses	Current Rating (A)	Switch width (mm)	Busbar Centre Spacing (mm)	Part No.
00	DIN 000 & DIN00	160A	50 mm	100 mm	SL00-3X3/100/F/HA
00	DIN 000 & DIN00	160A	50 mm	185 mm	SL00-3X3/185/F
1	DIN 1	250A	100 mm	185 mm	SL1G-3X3/3A
2	DIN 1 & 2	400A	100 mm	185 mm	SL2G-3X3/3A
3	DIN 1, 2 & 3	630A	100 mm	185 mm	SL3-3X3/3A
3	DIN3	910A	100mm	185mm	SL3-3X3/910/HA
	Solid Links	1000A (solid links only)	100 mm	185 mm	SL3-3X3/1000/HA
	DIN 2 & DIN 3 (2)	1250A	200 mm	185 mm	SL3-3X6/1250/HA
3	DIN3	1600A	200mm	185mm	SL3-3X6/2000/HA

Vertical fuse disconnects 3 pole individual pole switching

Size	For Fuses	Current Rating (A)	Switch width (mm)	Busbar Centre Spacing (mm)	Part No.
00	DIN 000 & DIN00	160A	50mm	100mm	SL00-3X/100/F/HA
00	DIN 000 & DIN00	160A	50 mm	185 mm	SL00-3X/185/F
1	DIN 1	250A	100 mm	185 mm	SL1G-3X/3A
2	DIN 1 & 2	400A	100 mm	185 mm	SL2G-3X/3A
3	DIN 1, 2 & 3	630A	100 mm	185 mm	SL3-3X/3A
3	DIN3	910A	100mm	185mm	SL3-3X/910/HA
	Solid Links	1000A (solid links only)	100 mm	185 mm	SL3-3X/1000/HA
	DIN 2 & DIN 3 (2x)	1250A	200mm	185 mm	SL3-3X2/1250/HA
	DIN 2 & DIN 3 (2x)	1600A	200mm	185 mm	SL3-3X2/2000/HA

Vertical fuse buscouplers 3 pole switching in one action

Size	For Fuses	Current Rating (A)	Switch width (mm)	Busbar Centre Spacing (mm)	Part No.
3	Solid Links	1000A (solid links only)	100 mm	185 mm	SLT3-3SL/3X3 /1000

SL00 - refer to technical pages 36 & 37
SL1 & SL2 - refer to technical page 38
SL3 - refer to technical pages 40, 41 & 42
Accessories - refer to pages 34 & 35

REAR VIEW
With CTS Fitted

SL1G-3X3/W/3A
SL2G-3X3/W/3A
SL3 -3X3/W/3A

SL3-3X3/1000/W/HA

SL1G-3X/W/3A
SL2G-3X/W/3A
SL3-3X/W/3A

SL3-3X/1000/W/HA

Terminal covers (sold separately) are required for all disconnects (refer to page 35)

Vertical fuse disconnects with CT mount facility - 3 pole switching in one action

Size	For Fuses	Current Rating (A)	Switch width (mm)	Busbar Centre Spacing (mm)	Part No.
2	DIN2	400	100	185	SL2 -3X3/W/3A
3	DIN2 & DIN3	630	100	185	SL3-3X3/W/3A
	Solid Links	1000A (Solid links only)	100	185	SL3-3X3/1000/W/HA

Vertical fuse disconnects with CT mount facility - 3 pole individual pole switching

Size	For Fuses	Current Rating (A)	Switch width (mm)	Busbar Centre Spacing (mm)	Part No.
2	DIN2	400	100	185	SL2-3X/W/3A
3	DIN2 & DIN3	630	100	185	SL3-3X/W/3A
	Solid Links	1000A (Solid links only)	100	185	SL3-3X/1000/W/HA

Current transformers for above class 1

				Ratio	Part No.
				250:5	WKD51/1/250-5
				400:5	WKD51/1/400-5
				600:5	WKD51/1/600-5
				1000:5	WKD52/1/1000-5

POWER UTILITIES RANGE

Vertical fuse disconnects with 3 pole switching in one action

Size	For Fuses	Current Rating (A)	Terminals	Switch width (mm)	Connection Capacity (mm2)	Part No.
00	DIN000 & 00	160	M8 Bolt	50	max. 95	PU-SL00-3X3/185/F
1	DIN1	250	M10 Bolt	100	max. 150	PU-SL1H-3X3/3A
2	DIN1 & 2	400	M12 Bolt	100	max. 240	PU-SL2H-3X3/3A
3	DIN1, 2 & 3	630	M12 Bolt	100	max. 300	PU-SL3-3X3/3A

PU

Vertical fuse disconnects with 3 pole individual switching action

Size	For Fuses	Current Rating (A)	Terminals	Switch width (mm)	Connection Capacity (mm2)	Part No.
00	DIN000 & 00	160	M8 Bolt	50	max. 95	PU-SL00-3X/185/F
1	DIN1	250	M10 Bolt	100	max. 150	PU-SL1H-3X/3A
2	DIN1 & 2	400	M12 Bolt	100	max. 240	PU-SL2H-3X/3A
3	DIN1, 2 & 3	630	M12 Bolt	100	max. 300	PU-SL3-3X/3A

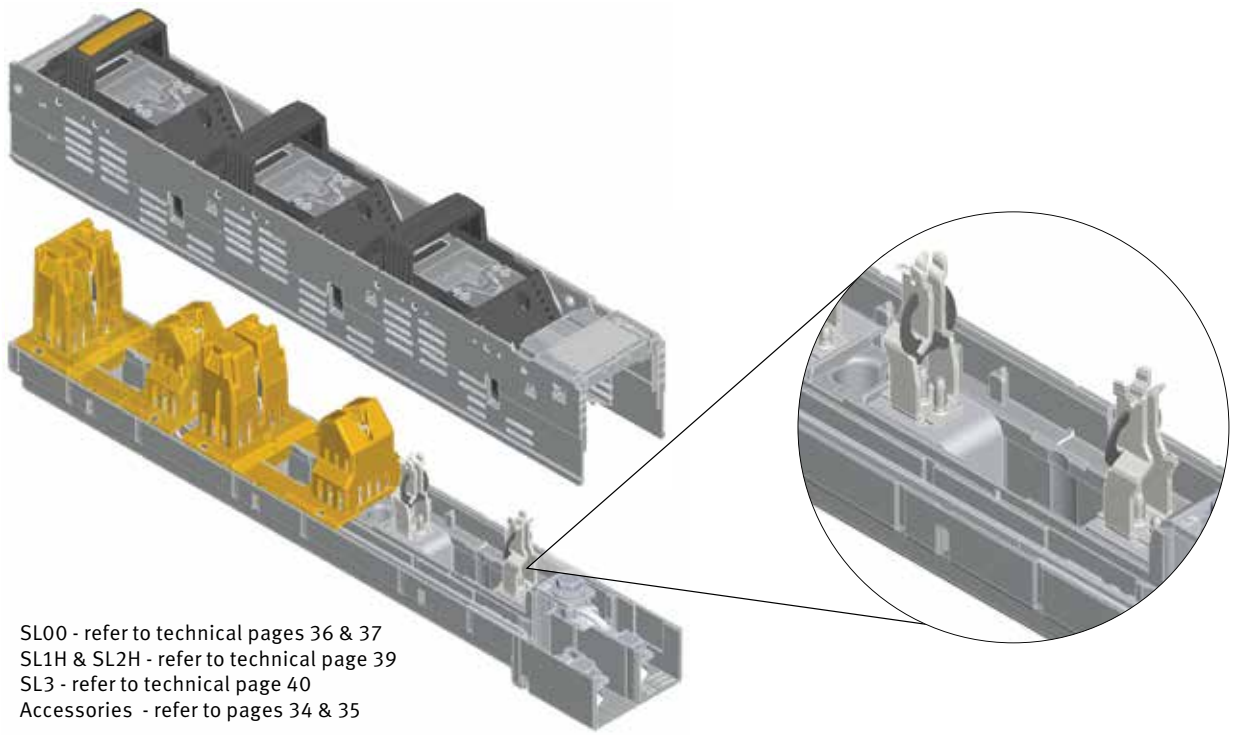

SL00 - refer to technical pages 36 & 37
SL1H & SL2H - refer to technical page 39
SL3 - refer to technical page 40
Accessories - refer to pages 34 & 35

Accessories

	Description	For Mounting on	Part No.
	Prism clamp		
	10-70 mm² Al/Cu	SL00	P0070
	Clip terminal		
	1,5-70 mm² Cu	SL00	S00
	Direct terminal clamp KM2G..		
	50-300 mm² Al/Cu	SL1-3	KM2G/AF3040
	Direct terminal clamp		
	70-240 mm² Al/Cu	SL1-3	K2G/A
	Direct terminal clamp		
	2 conductors 50-120 mm² Al/Cu	SL1-3	K2HG/2/AF30
	Direct terminal clamp		
	2 conductors 120-185 mm² Al/Cu	SL1-3	KV2HG/2/WF30
	Cover for clamp		
	For V-type box clamp type KM2G		HRV
	For clamp type K2G/A, K2HG/ and KV2HG		HR-K2

Accessories

	Description	For Mounting on	Part No.
	Terminal cover		
	For SL00-185 + PU-SL00	SL00/185	HA-SL00/185
	For SL123 + PU-SL123	SL1-3	HA-SL123/10
	For SL3-3X/1000 Extended depth+ PU-SL3x	SL3	HA220-SL123/10
	Double width terminal cover	SL3	HA220-SL3x2/10
	Terminal extension kit		
	Terminal for 2x300mm² + PU (3 Pieces)	SL1-3	VS-SL3/1000
	Terminal kit for ganged disconnect 3 x 300mm +PU	SL1-3	VS-SL3x2
	For connection of 4 x 240mm² Ganged disconnect	SL3	VS-SL3/4x240mm²
	For connection of 1 x 400mm²	SL3	VS-SL3/400QMM
	Handle connecting kit		
	For ganged disconnector (1x handle Joiner)	SL3	VBS-SL3X6(2)
	Isolator label	SL1,2+3	Isolator-lab
	Joining Kit (3x handles connection link)		VBS-SL3 Kit
	Joining Kit to make SL3-3X2/1250	SL3	VS-SL3/1250VBS/HA
	Fuse cover with symbol “Do not switch”		
	Size 00		SZ00-R
	Size 1-3		SZ123-R
	Cover holder		
	Set of 4 blocks	SL00-3	AH-SL
	Switch Posi Indicator		
	For Vert 3x3 only	SL1,2+3	EV-SL123/3x3/10

TECHNICAL INFORMATION

NH strip-type fuse-switch-disconnectors – Technical data

Type					SL00/100		SL00/185	
Electrical characteristics	According to standard				DIN EN 60947-3			
	For NH fuse-links acc. to DIN VDE 0636-2		Size		000/00		000/00	
	Rated operational voltage		U_e	V	AC690		AC690	
	Rated operational current [1]		I_e	A	160		160	
	Conv. free air thermal current with fuse-links		I_{th}	A	160		160	
	Conv. free air thermal current with solid-links		I_{th}	A	210		210	
	Rated frequency		f	Hz	50-60		50-60	
	Rated insulation voltage		U_i	V	AC800		AC800	
	Total power loss at I_{th} (without fuse-links)		P_v	W	18		23	
	Power loss at 80% I_{th} (without fuse-links) [2]		P_v	W	11.5		14.7	
	Rated impulse withstand voltage		U_{imp}	kV	8		8	
	Utilization category		-	-	AC-22B (160A/400V) AC-22B (160A/500V) AC-22B (100A/690V) DC21B (160A/250V)		AC-23B (160A/400V) AC-23B (160A/500V) AC-22B (160A/690V)	
	Rated conditional short-cirquit current [3]		I_{cc}	kA	80		100kA (690V) 120kA (500V)	
	Max. permis. power loss per fuse-link		P_a	W	12		12	
Cable terminal	Flat terminal	Bolt diameter	-	-	M8		M8	
		Cable lug	-	mm^2	1 x 10-95 (max. 25mm width)		1 x 10-95 (max. 25mm width)	
		Flat bar	-	mm	20 x10		20 x10	
		Tightening torque	M_a	Nm	12-15		12-15	
	Clamp	Clamping cross-section	-	mm^2	S00	○: 1.5-70 Cu/ □: 6 x 9 x 0.8	S00	○: 1.5-70 Cu/ □: 6 x 9 x 0.8
		Tightening torque	-	Nm		2.6		2.6
		Clamping cross-section	-	mm^2	P00-70	10-70 Al/Cu	P00-70	10-70 Al/Cu
		Tightening torque	-	Nm		2.6		2.6

Annotation: ○ = Round conductor □ = Strip conductor

Type						SL00/100		SL00/185
Cable terminal	Clamp	Clamping cross-section	-	mm^2	KU00	10-95 Al/Cu [5]	KU00	10-95 Al/Cu [5]
		Tightening torque	-	Nm		10		15
		Clamping cross-section	-	mm^2	F70	○: 1.5-70 Cu/ □: 6 x 9 x 0.8Cu	KRO	16-95 re/rm 35-150 se/sm
		Tightening torque	-	Nm		2.6		20Nm
		Clamping cross-section	-	mm^2	KM00	16-95 Al/Cu	KM00	16-95 Al/Cu
		Tightening torque	-	Nm		10		10
Degree of protection	Front side, device fitted with clamp and lateral covers	Operating condition	-	-		IP30		IP30
		Switching element open	-	-		IP10		IP10
Operating conditions	Ambient temperature [4]		T_{amb}	°C		-25 *to* +70		
	Rated operating mode		-	-		Uninterrupted duty		
	Actuation		-	-		Dependent manual operation		
	Mounting position		-	-		Vertical, horizontal		
	Altitude		-	m		Up to 2000		
	Pollution degree		-	-		3		
	Overvoltage category		-	-		III		IV

1) In case of mounting of several units in low voltage switchgear-combinations, please consider rated diversity factors acc. to DIN EN 61439.
2) Reference value for replacement of devices acc. to DIN EN 61439-1 clause 10.10.4.2.
3) Type tested with NH fuse-links characteristic gG.
4) 35°C Normal temperature, above 35°C up to 70°C with reduces operating current.
5) No verification of non-deterioration acc. to IEC 60269-2 for Al-conductors.

NH strip-type fuse-switch-disconnectors – Technical data

Type					SL1		SL2	
Electrical characteristics	According to standard				DIN EN 60947-3			
	For NH fuse-links acc. to DIN VDE 0636-2		Size		1		2	
	Rated operational voltage		U_e	V	AC690		AC690	
	Rated operational current [1]		I_e	A	250		400	
	Conv. free air thermal current with fuse-links		I_{th}	A	250		400	
	Conv. free air thermal current with solid-links		I_{th}	A	400		630	
	Rated frequency		-	Hz	50-60		50-60	
	Rated insulation voltage		U_i	V	AC1000		AC1000	
	Total power loss at I_{th} (without fuse-links)		P_v	W	23		54	
	Power loss at 80% I_{th} (without fuse-links) [2]		P_v	W	14.7		34.6	
	Rated impulse withstand voltage		U_{imp}	kV	12		12	
	Utilization category		-	-	AC-23B (250A/400V) AC-22B (250A/500V) AC-21B (250A/690V) Nur / Only 3x3: DC21B (250A/440V)		AC-23B (400A/400V) AC-22B (400A/500V) AC-21B (400A/690V) Nur / Only 3x3: DC21B (400A/440V)	
	Rated conditional short-cirquit current [3]		I_{cc}	kA	120			
	Max. permis. power loss per fuse-link		P_a	W	32		45	
Cable terminal	Flat terminal	Bolt diameter	-	-	M10		M12	
		Cable lug	-	mm^2	1 x 25-185		1 x 25-300	
		Flat bar	-	mm	30 x10		30 x10	
		Tightening torque	M_a	Nm	30-35		35-40	
	Clamp	Clamping cross-section	-	mm^2	KM2G-F	25-240	KM2G-F	25-240
			-	mm^2	RM300	25-300	RM300	25-300
		Tightening torque	-	Nm	-	32	-	32
					RM300: 25-70	12	RM300: 25-70	12
Degree of protection	Front side, device fitted with clamp and lateral covers	Operating condition	-	-	IP30		IP30	
		Switching element open	-	-	IP10		IP10	
Operating conditions	Ambient temperature [4]		T_{amb}	°C	-25 *to* +70			
	Rated operating mode		-	-	Uninterrupted duty			
	Actuation		-	-	Dependent manual operation			
	Mounting position		-	-	Vertical, horizontal			
	Altitude		-	m	Up to 2000			
	Pollution degree		-	-	3			
	Overvoltage category		-	-	IV			

1) In case of mounting of several units in low voltage switchgear-combinations, please consider rated diversity factors acc. to DIN EN 61439.

2) Reference value for replacement of devices acc. to DIN EN 61439-1 clause 10.10.4.2.

3) Type tested with NH fuse-links characteristic gG.

4) 35°C Normal temperature, above 35°C up to 70°C with reduces operating current.

Type					SL1H		SL2H	
Electrical characteristics	According to standard				DIN EN 60947-3			
	For NH fuse-links acc. to DIN VDE 0636-2		Size		1		2	
	Rated operational voltage		U_e	V	AC690		AC690	
	Rated operational current [1]		I_e	A	250		400	
	Conv. free air thermal current with fuse-links		I_{th}	A	250		400	
	Conv. free air thermal current with solid-links		I_{th}	A	400		400	
	Rated frequency		-	Hz	50-60		50-60	
	Rated insulation voltage		U_i	V	AC1000		AC1000	
	Total power loss at I_{th} (without fuse-links)		P_v	W	29		73	
	Power loss at 80% I_{th} (without fuse-links) [2]		P_v	W	18.6		46.7	
	Rated impulse withstand voltage		U_{imp}	kV	12		12	
	Utilization category		-	-	AC-23B (250A/400V) AC-22B (250A/500V) AC-21B (250A/690V)		AC-23B (400A/400V) AC-22B (400A/500V) AC-21B (400A/690V)	
	Rated conditional short-cirquit current [3]		I_{cc}	kA	80			
	Max. permis. power loss per fuse-link		P_a	W	23		34	
Cable terminal	Flat terminal	Bolt diameter	-	-	M10		M12	
		Cable lug	-	mm^2	1 x 25-185		1 x 25-300	
		Flat bar	-	mm	30 x10		30 x10	
		Tightening torque	M_a	Nm	30-35		35-40	
	Clamp	Clamping cross-section	-	mm^2	KM2G-F	25-240	KM2G-F	25-240
				mm^2	RM300	25-300	RM300	25-300
		Tightening torque	-	Nm	-	32	-	32
					RM300: 25-70	12	RM300: 25-70	12
Degree of protection	Front side, device fitted with clamp and lateral covers	Operating condition	-	-	IP30		IP30	
		Switching element open	-	-	IP10		IP10	
Operating conditions	Ambient temperature [4]		T_{amb}	°C	-25 *to* +70			
	Rated operating mode		-	-	Uninterrupted duty			
	Actuation		-	-	Dependent manual operation			
	Mounting position		-	-	Vertical, horizontal			
	Altitude		-	m	Up to 2000			
	Pollution degree		-	-	3			
	Overvoltage category		-	-	IV			

1) In case of mounting of several units in low voltage switchgear-combinations, please consider rated diversity factors acc. to DIN EN 61439.
2) Reference value for replacement of devices acc. to DIN EN 61439-1 clause 10.10.4.2.
3) Type tested with NH fuse-links characteristic gG.
4) 35°C Normal temperature, above 35°C up to 70°C with reduces operating current.

NH strip-type fuse-switch-disconnectors – Technical data

Type					SL3		SL3/910A	
Electrical characteristics	According to standard				DIN EN 60947-3			
	For NH fuse-links acc. to DIN VDE 0636-2		Size		3		3	
	Rated operational voltage		U_e	V	AC690		AC400	
	Rated operational current [1]		I_e	A	630		910	
	Conv. free air thermal current with fuse-links		I_{th}	A	630		910	
	Conv. free air thermal current with solid-links		I_{th}	A	800		1250	
	Rated frequency		-	Hz	50-60		50-60	
	Rated insulation voltage		U_i	V	AC1000		AC690	
	Total power loss at I_{th} (without fuse-links)		P_v	W	115		155	
	Power loss at 80% I_{th} (without fuse-links) [2]		P_v	W	73.6		99.2	
	Rated impulse withstand voltage		U_{imp}	kV	12		8	
	Utilization category		-	-	AC-23B (630A/400V) AC-22B (630A/500V) AC-21B (630A/690V) Nur / *Only* 3x3: DC21B (500A/440V)		AC-22B (1250A/400V) AC-22B (910A/400V)	
	Rated conditional short-cirquit current		I_{cc}	kA	120 [3]		80	
	Rated short-time withstand current		I_{cw}	kA	10/15kA/1s [4]		10/15kA/1s [4]	
	Max. permis. power loss per fuse-link		P_a	W	48		61	
Cable terminal	Flat terminal	Bolt diameter	-	-	M12		2 x M12	
		Cable lug	-	mm^2	1 x 25-300	Width max. 43mm	2 x 300, 3 x 185	
		Flat bar	-	mm	30 x10		80 x10	
		Tightening torque	M_a	Nm	35-40		35-40	
	Clamp	Clamping cross-section	-	mm^2	KM2G	25-150/ 185-300	-	-
			-	mm^2	KM2G-F	25-240	-	-
			-	mm^2	RM300	25-300	-	-
		Tightening torque	-	Nm	-	32	-	32
					RM300: 25-70	12	RM300: 25-70	12
Degree of protection	Front side, device fitted with clamp and lateral covers	Operating condition	-	-	IP30		IP30	
		Switching element open	-	-	IP10		IP10	
Operating conditions	Ambient temperature [5]		T_{amb}	°C	-25 *to* +70			
	Rated operating mode		-	-	Uninterrupted duty			
	Rated operating mode		-	-	Dependent manual operation			
	Mounting position		-	-	Vertical, horizontal			
	Altitude		-	m	Up to 2000			
	Pollution degree		-	-	3			
	Overvoltage category		-	-	IV			

1) In case of mounting of several units in low voltage switchgear-combinations, please consider rated diversity factors acc. to DIN EN 61439.
2) Reference value for replacement of devices acc. to DIN EN 61439-1 clause 10.10.4.2.
3) Type tested at AC420V with NH fuse-links 630A/500V characteristic gG, at AC725V with NH fuse-links 500A/690V characteristic gG.
4) 1-pole/3-pole switchable.
5) 35°C Normal temperature, above 35°C up to 70°C with reduces operating current.

Type					SL3/1000-TM	SL3/1250
Electrical characteristics	According to standard				DIN EN 60947-3	
	For NH fuse-links acc. to DIN VDE 0636-2		Size		3	3
	Rated operational voltage		U_e	V	AC690	AC690
	Rated operational current [1]		I_e	A	1000	1250
	Conv. free air thermal current with fuse-links		I_{th}	A	630	1250
	Conv. free air thermal current with solid-links		I_{th}	A	1000	1600
	Rated frequency		-	Hz	50-60	50-60
	Rated insulation voltage		U_i	V	AC1000	AC1000
	Total power loss at I_{th} (without fuse-links)		P_v	W	275	215
	Power loss at 80% I_{th} (without fuse-links) [2]		P_v	W	176	138
	Rated impulse withstand voltage		U_{imp}	kV	12	12
	Utilization category		-	-	AC-22B (1000A/400V) AC-22B (800A/500V) AC-21B (630A/690V)	AC-22B (1250A/400V) AC-22B (1250A/500V) AC-21B (1250A/690V)
	Rated conditional short-cirquit current		I_{cc}	kA	120 [3]	80
	Rated short-time withstand current		I_{cw}	kA	10/15/25/1s [4]	20/25/46/1s [4]
	Max. permis. power loss per fuse-link		P_a	W	51	48
Cable terminal	Flat terminal	Bolt diameter	-	-	2 x M12	3 x M12
		Cable lug	-	mm^2	2 x 300, 3 x 120	3 x 300, 4 x 185
		Flat bar	-	mm	80 x10	-
		Tightening torque	M_a	Nm	35-40	35-40
Degree of protection	Front side, device fitted with clamp and lateral covers	Operating condition	-	-	IP30	IP30
		Switching element open	-	-	IP10	IP10
Operating conditions	Ambient temperature [5]		T_{amb}	°C	-25 *to* +70	
	Rated operating mode		-	-	Uninterrupted duty	
	Rated operating mode		-	-	Dependent manual operation	
	Mounting position		-	-	Vertical, horizontal	
	Altitude		-	m	Up to 2000	
	Pollution degree		-	-	3	
	Overvoltage category		-	-	IV	

1) In case of mounting of several units in low voltage switchgear-combinations, please consider rated diversity factors acc. to DIN EN 61439.
2) Reference value for replacement of devices acc. to DIN EN 61439-1 clause 10.10.4.2.
3) Type tested at AC420V with NH fuse-links 630A/500V characteristic gG, at AC725V with NH fuse-links 500A/690V characteristic gG.
4) 1-pole/3-pole switchable/with additional interlock.
5) 35°C Normal temperature, above 35°C up to 70°C with reduces operating current.

NH strip-type fuse-switch-disconnectors – Technical data

Type					SL3/1600-TM	SL3/2000-TM
Electrical characteristics	According to standard				DIN EN 60947-3	
	For NH fuse-links acc. to DIN VDE 0636-2		Size		3	3
	Rated operational voltage		U_e	V	AC690	AC400
	Rated operational current [1]		I_e	A	1600	2000
	Conv. free air thermal current with fuse-links		I_{th}	A	1250	gG 1600/gTr 1444
	Conv. free air thermal current with solid-links		I_{th}	A	1600	2000
	Rated frequency		-	Hz	50-60	50-60
	Rated insulation voltage		U_i	V	AC1000	AC690
	Total power loss at I_{th} (without fuse-links)		P_v	W	350	375
	Power loss at 80% I_{th} (without fuse-links) [2]		P_v	W	224	240
	Rated impulse withstand voltage		U_{imp}	kV	12	8
	Utilization category		-	-	AC-22B (1600A/400V) AC-22B (1600A/500V) AC-21B (1250A/690V)	AC-22B (2000A/400V)
	Rated conditional short-cirquit current [3]		I_{cc}	kA	80	50
	Rated short-time withstand current		I_{cw}	kA	20/25/46/1s [4]	20/25/46/1s [4]
	Max. permis. power loss per fuse-link		P_a	W	48	51
Cable terminal	Flat terminal	Bolt diameter	-	-	3 x M12	4 x M12
		Cable lug	-	mm^2	3 x 300, 4 x 185	4 x 300
		Flat bar	-	mm	-	-
		Tightening torque	M_a	Nm	35-40	35-40
Degree of protection	Front side, device fitted with clamp and lateral covers	Operating condition	-	-	IP30	IP30
		Switching element open	-	-	IP10	IP10
Operating conditions	Ambient temperature [5]		T_{amb}	°C	-25 *to* +70	
	Rated operating mode		-	-	Uninterrupted duty	
	Rated operating mode		-	-	Dependent manual operation	
	Mounting position		-	-	Vertical, horizontal	
	Altitude		-	m	Up to 2000	
	Pollution degree		-	-	3	
	Overvoltage category		-	-	IV	

1) In case of mounting of several units in low voltage switchgear-combinations, please consider rated diversity factors acc. to EN 61439-1.
2) Reference value for replacement of devices acc. to DIN EN 61439-1 clause 10.10.4.2.
3) Type tested with NH fuse-links characteristic gG.
4) 1-pole/3-pole switchable/with additional interlock.
5) 35°C Normal temperature, above 35°C up to 70°C with reduces operating current.

DIMENSIONS

SL00-3X/185/F
PU-SL00-3X/185/F

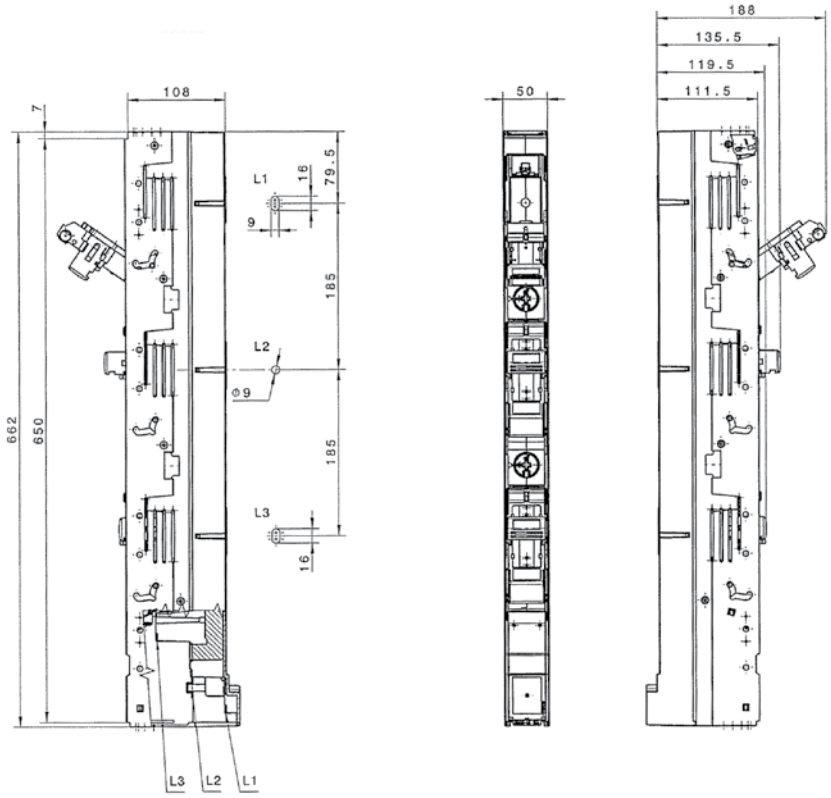

SL00-3X3/185/F
PU-SL00-3X3/185/F

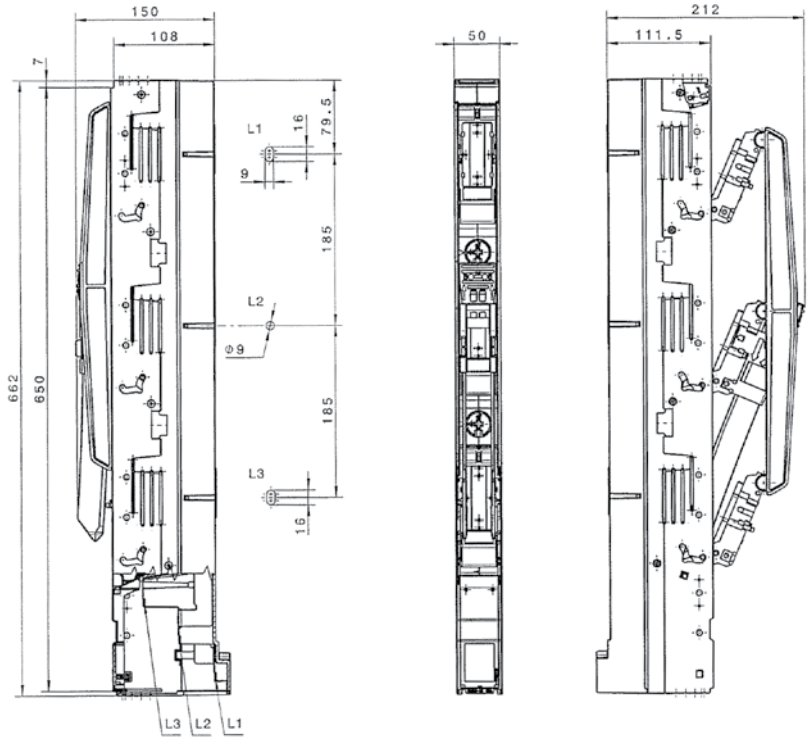

SL00-3X../100

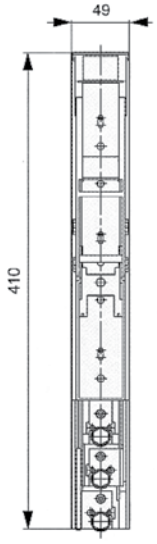

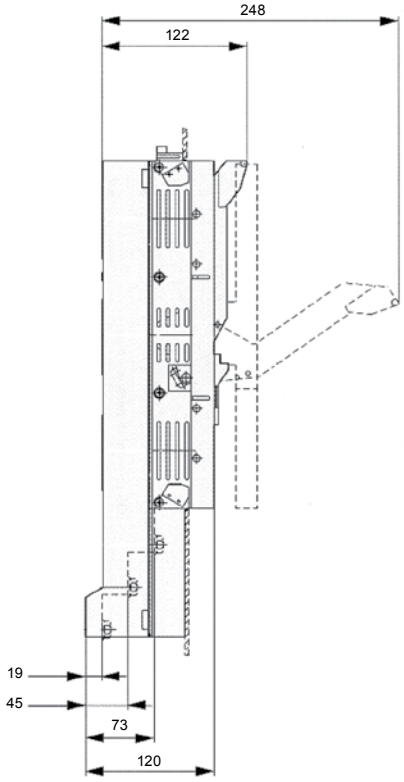

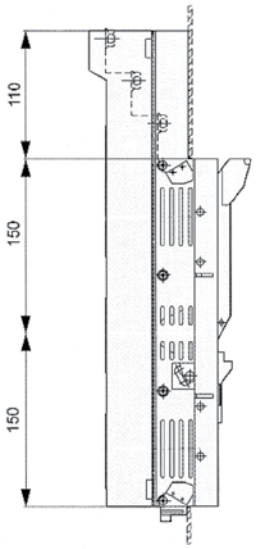

SL1G-3X/3A
SL2G-3X3/3A
SL2G-3X/3A
SL2G-3X3/3A
SL3-3X/3A
SL3-3X3/3A

SL1G-3X/W/3A
SL2G-3X3/W/3A
SL2G-3X/W/3A
SL2G-3X3/W/3A
SL3-3X/W/3A
SL3-3X3/W/3A

PU-SL1H-3X/3A
PU-SL1H-3X3/3A
PU-SL2H-3X/3A
PU-SL2H-3X3/3A
PU-SL3H-3X/3A
PU-SL3H-3X3/3A

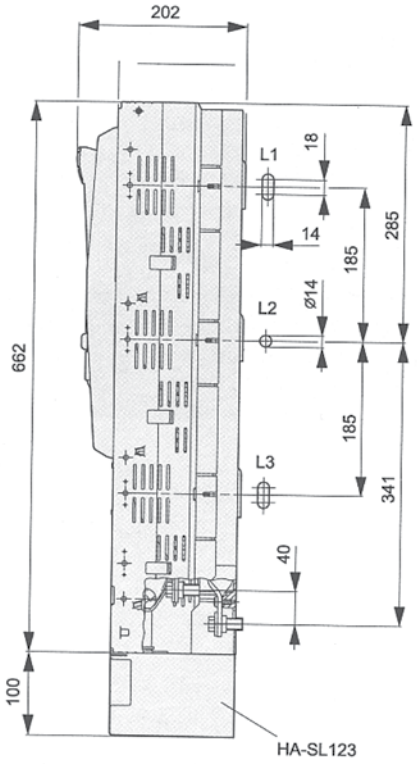

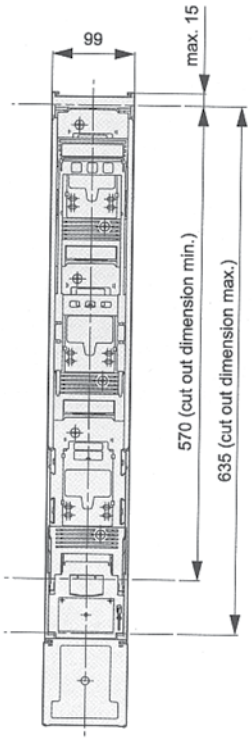

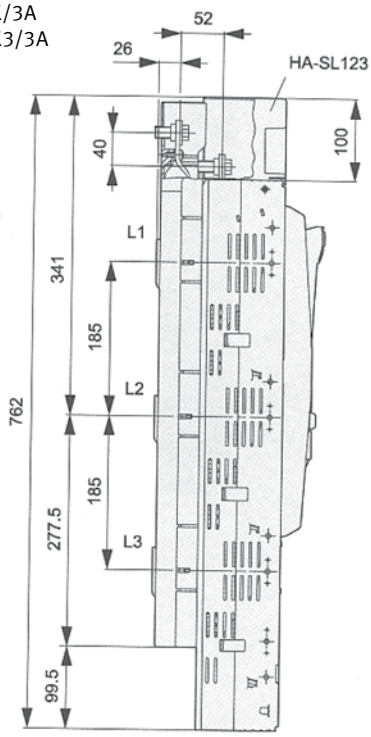

SL3-3X/910/HA
SL3-3X3/910/HA

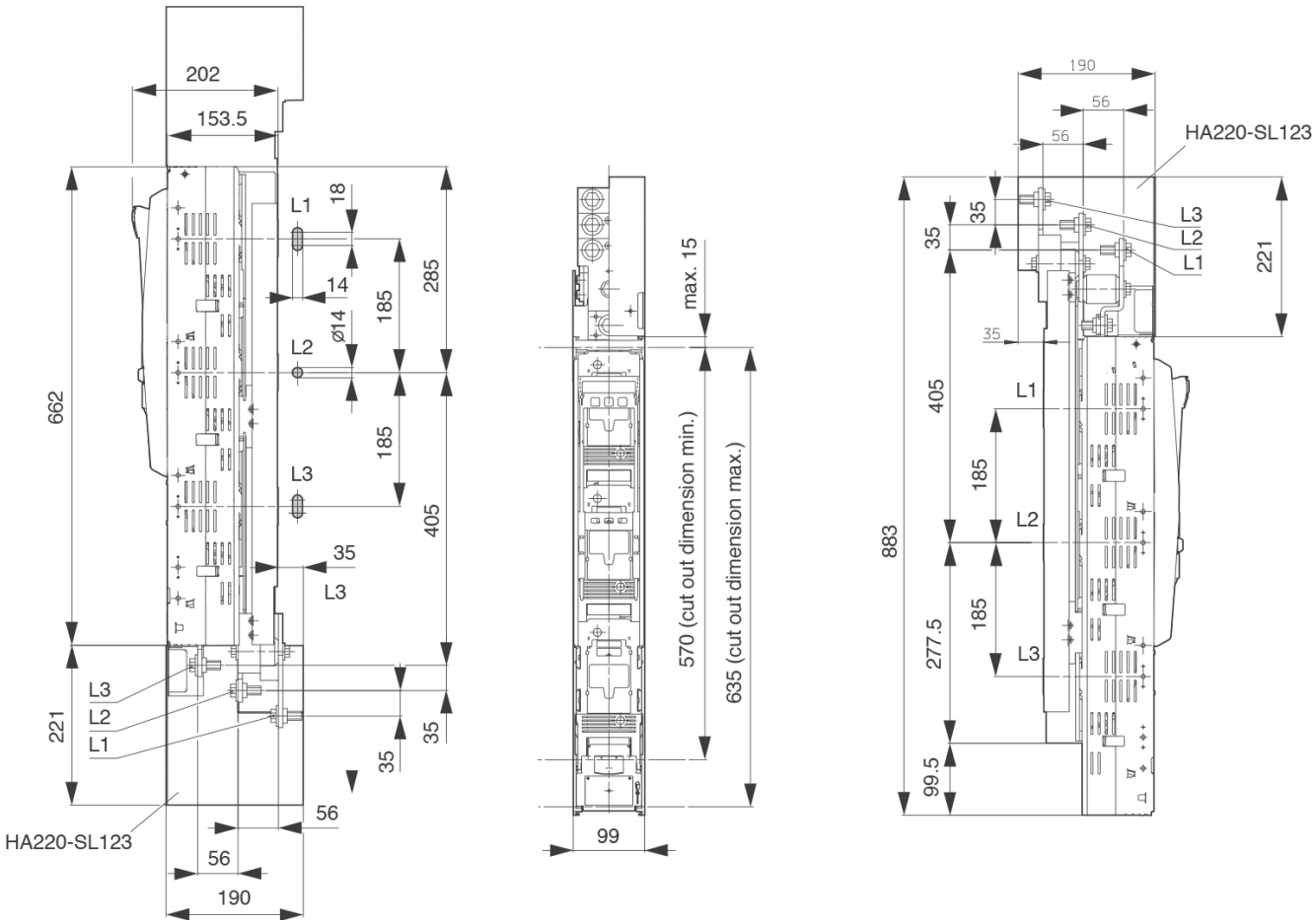

SL3-3X/1000/HA
SL3-3X3/1000/HA

SL3-3X/1000/W/HA
SL3-3X3/1000/W/HA

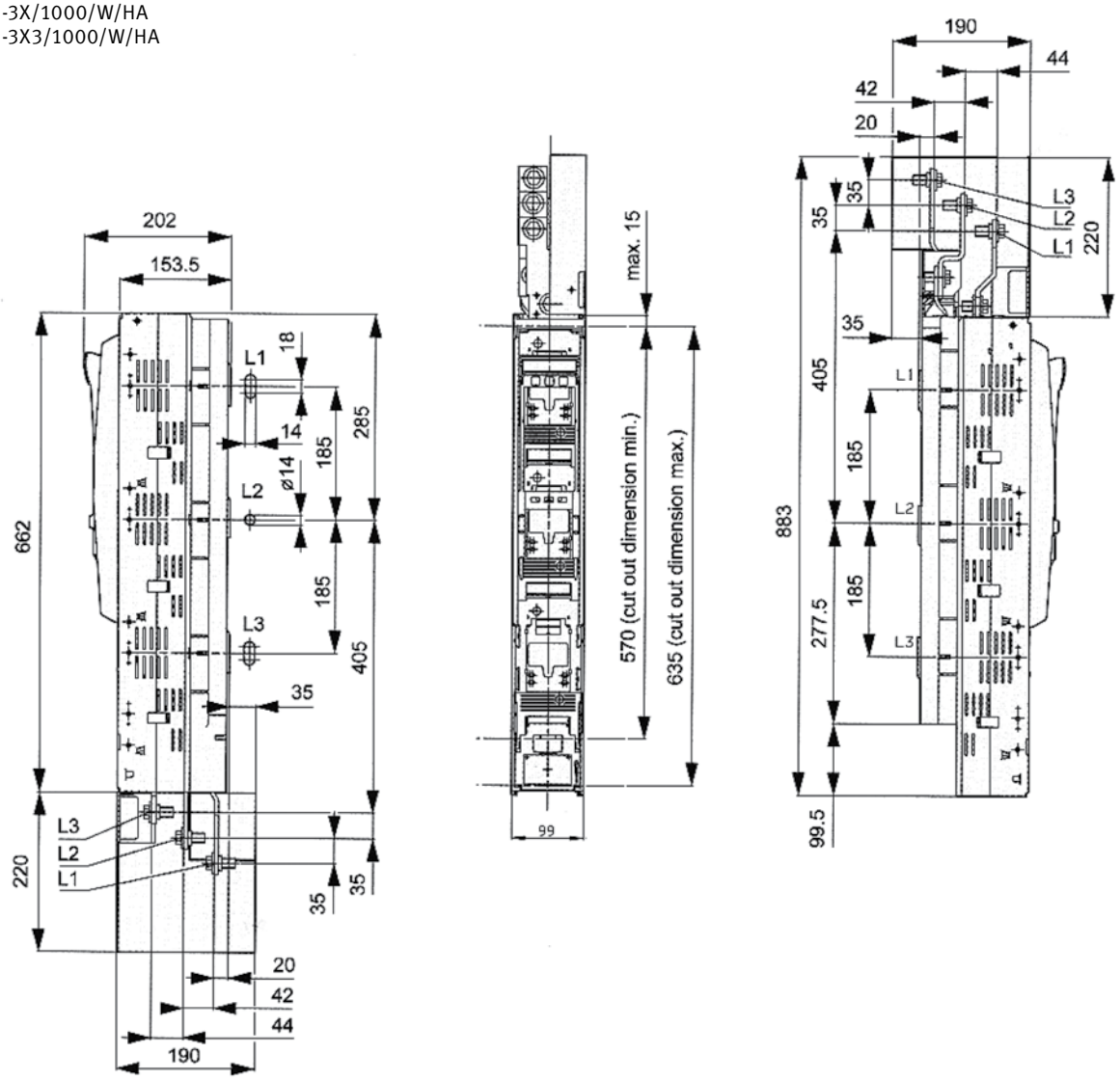

SL3-3X2/1250/HA
SL3-3X6/1250/HA

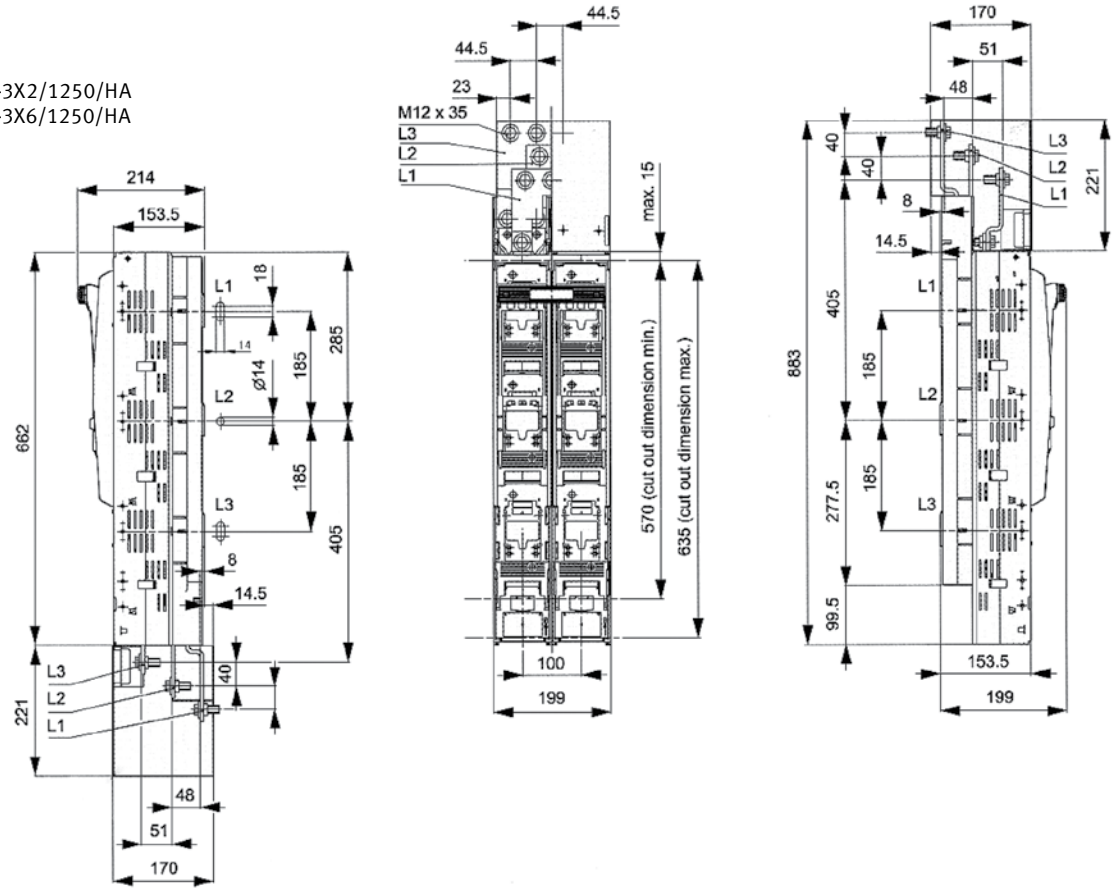

SL3-3X2/2000/HA
SL3-3X6/2000/HA

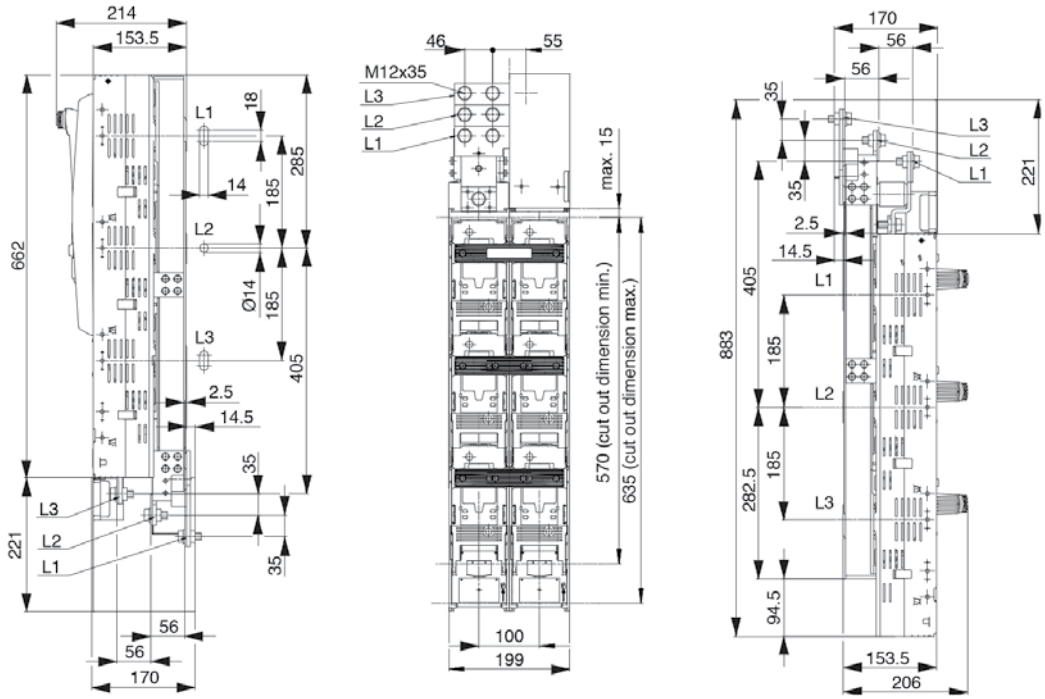

Vertical disconnect accessories

Terminals with connecting lugs

K2G/A

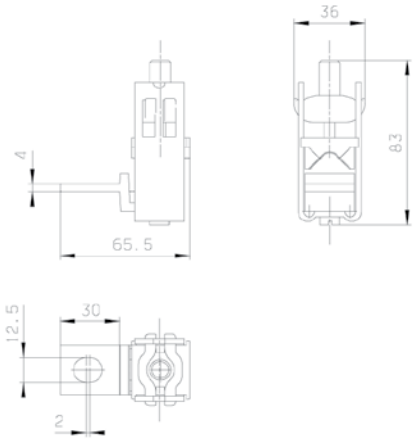

K2HG/2/AF30

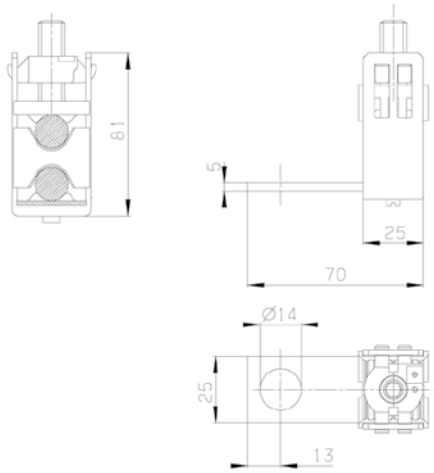

KM2G/AF3040

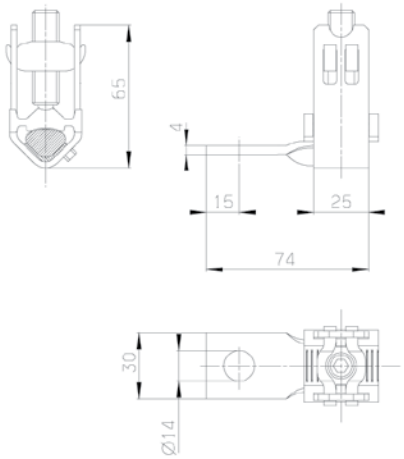

KV2HG/2/AF30

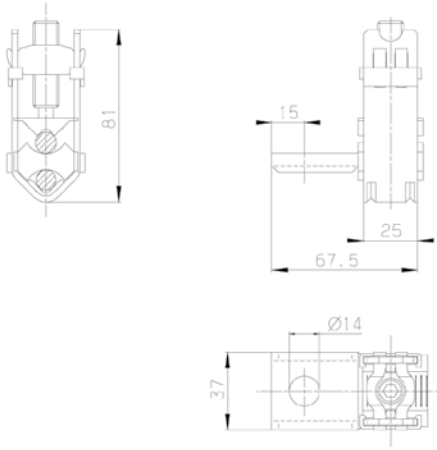

Covers for terminals with connecting lugs

HR

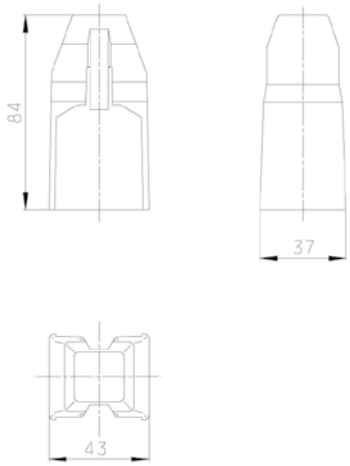

HRV

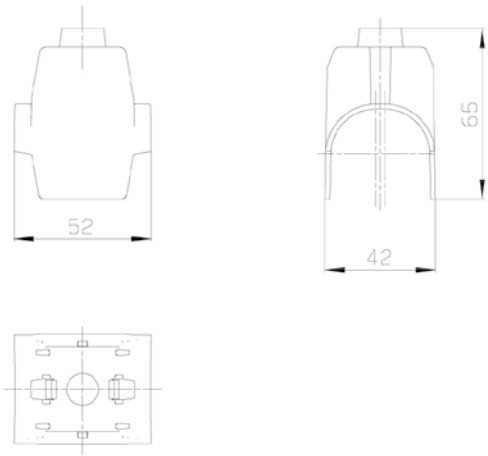

Terminal covers

HA-SL00/185

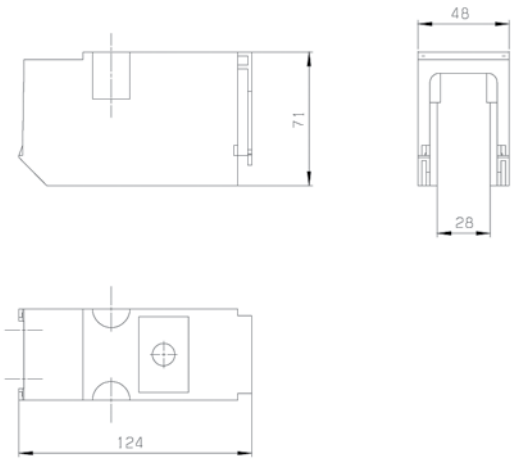

HA-SL123/10

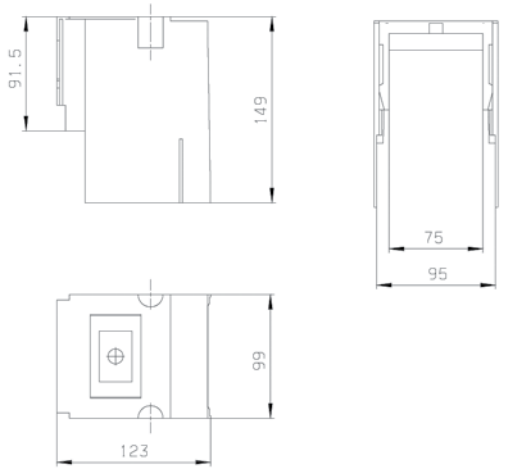

HA220-SL123/10

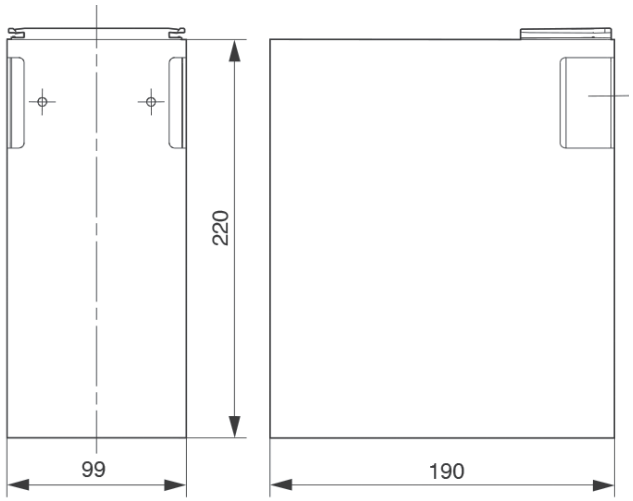

KETO – The new generation NH-fuse-switch-disconnector

KETO-disconnectors can be combined regardless of the size. Different dimensions are adjusted to an uniform cover cutout with the available components for touch protection. Many functions are integrated across all construction sizes, e. g. four cover support levels at 32, 60, 70 and 90mm above top of busbar. This ensures an optimal system integration. Versions for baseplate mounting, busbar- and DIN rail mounting offer the suitable solution for each application.

Note: Product colour may vary depending on stock available.

KETO size 00
I_e = 160A
Overall width: 106mm
System size: 195mm

KETO size 1
I_e = 250A
Overall width: 184mm
System size: 300mm

KETO size 2
I_e = 400A
Overall width: 210mm
System size: 300mm

KETO size 3
I_e = 630A
Overall width: 250mm
System size: 300mm

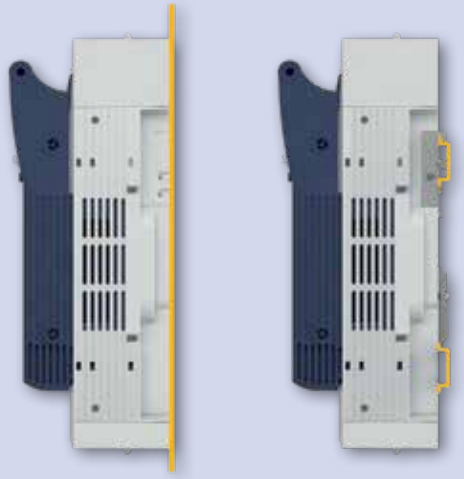

Baseplate mounting
Multiple mounting hole pattern allow a variable installation and quick replacement. KETO-00 and KETO-1 can optionally be built on two parallel DIN-rails.

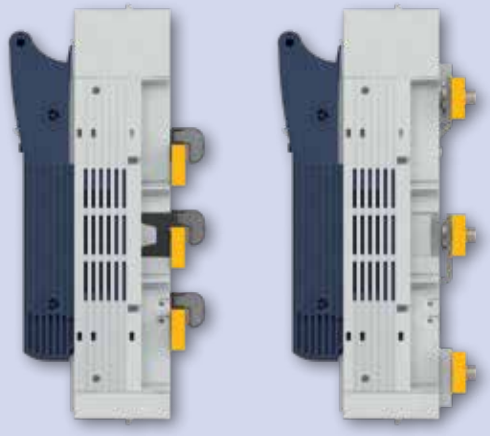

Busbar mounting
KETO-00 to KETO-3 are easy to fit onto busbar systems with 60mm centre distance – without any drilling.

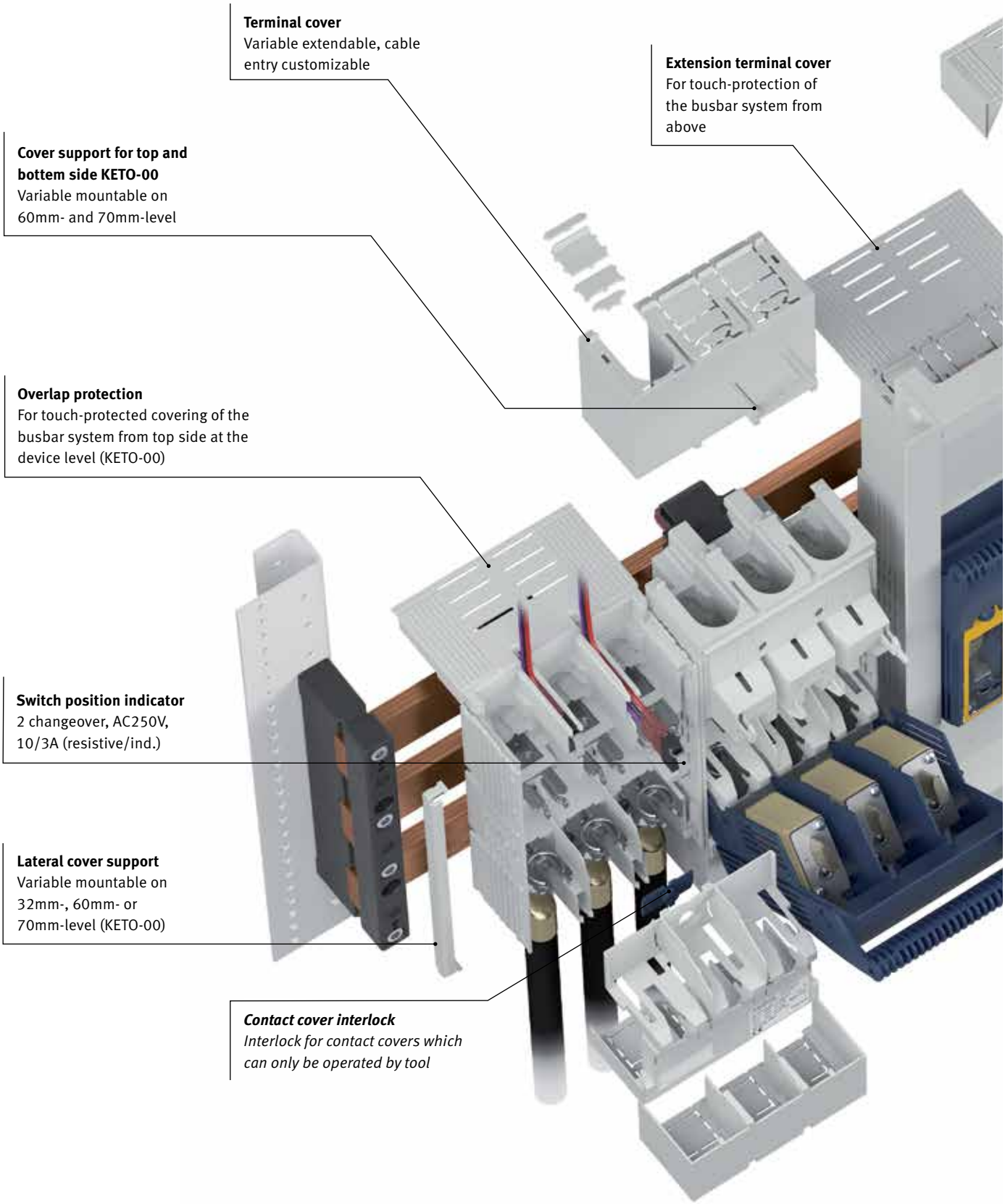
Terminal cover
Variable extendable, cable entry customizable
Extension terminal cover
For touch-protection of the busbar system from above
Cover support for top and bottem side KETO-00
Variable mountable on 60mm- and 70mm-level
Overlap protection
For touch-protected covering of the busbar system from top side at the device level (KETO-00)
Switch position indicator
2 changeover, AC250V, 10/3A (resistive/ind.)
Lateral cover support
Variable mountable on 32mm-, 60mm- or 70mm-level (KETO-00)
Contact cover interlock
Interlock for contact covers which can only be operated by tool

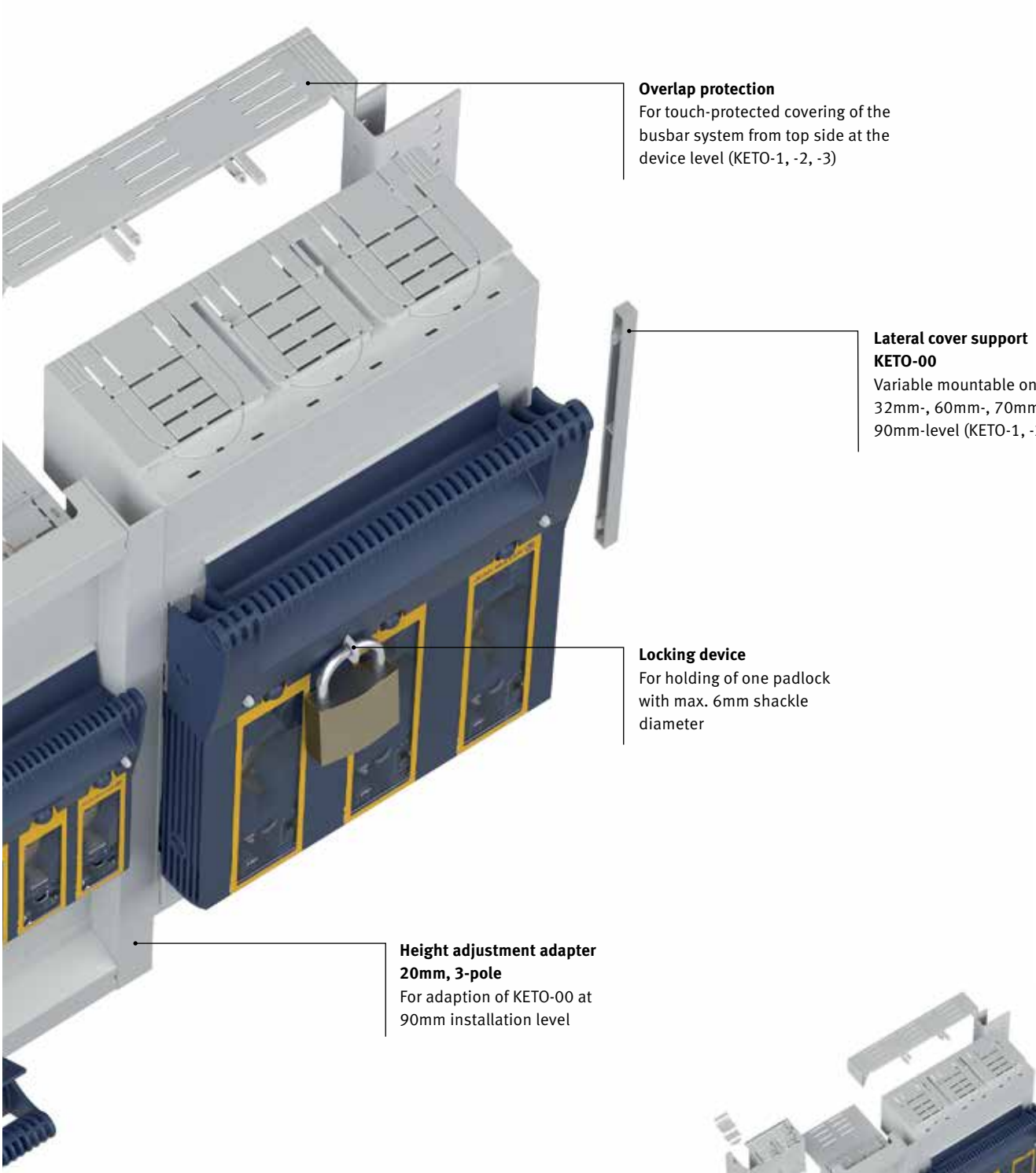

Focus on user safety

At KETO is safety always at the highest level. Even under voltage ensure features like overlap-protectors, status indicators, easy to use measuring access but also special touch protection covers at any time for maximum user safety.

Options for all conditions
Depending on the installation situation the specifications vary, options are required. Various types of terminals, four different clamping systems and many further equipment options – KETO is the solution for all installation conditions.

Fuse-monitoring ESlight
Selective fault indication – one red LED per phase

Power theft protection
For tamper-proof locking of the windows

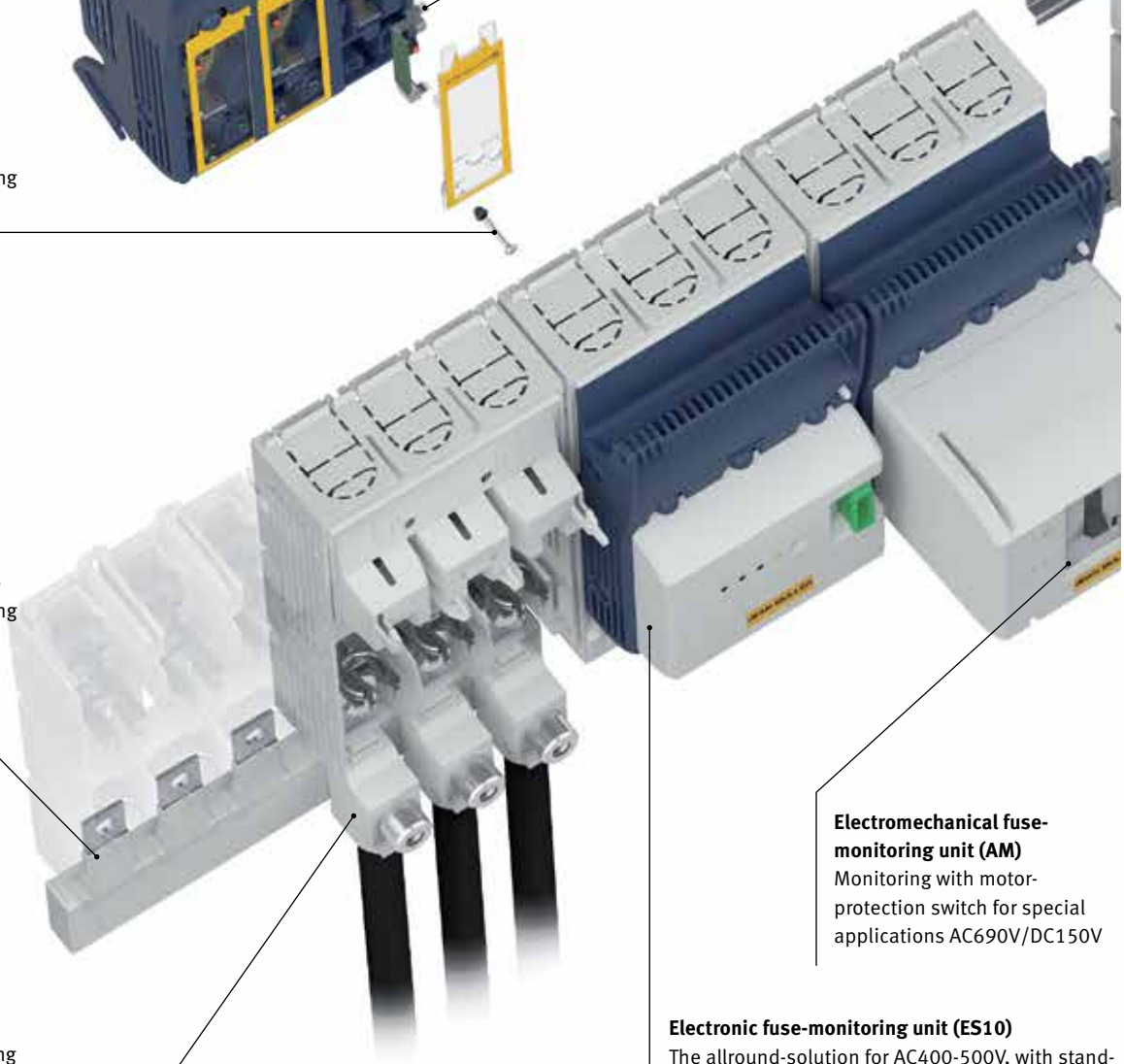

Phase busbar 3-phase
Touch-protected feeding system for up to five KETO-00

Electromechanical fuse-monitoring unit (AM)
Monitoring with motor-protection switch for special applications AC690V/DC150V

Feeding clamp
Touch-protected feeding clamps 25-95mm² for KETO-00, terminal M8

Electronic fuse-monitoring unit (ES10)
The allround-solution for AC400-500V, with stand-by indicator, fault simulation and selective fault indicator for fuse failure

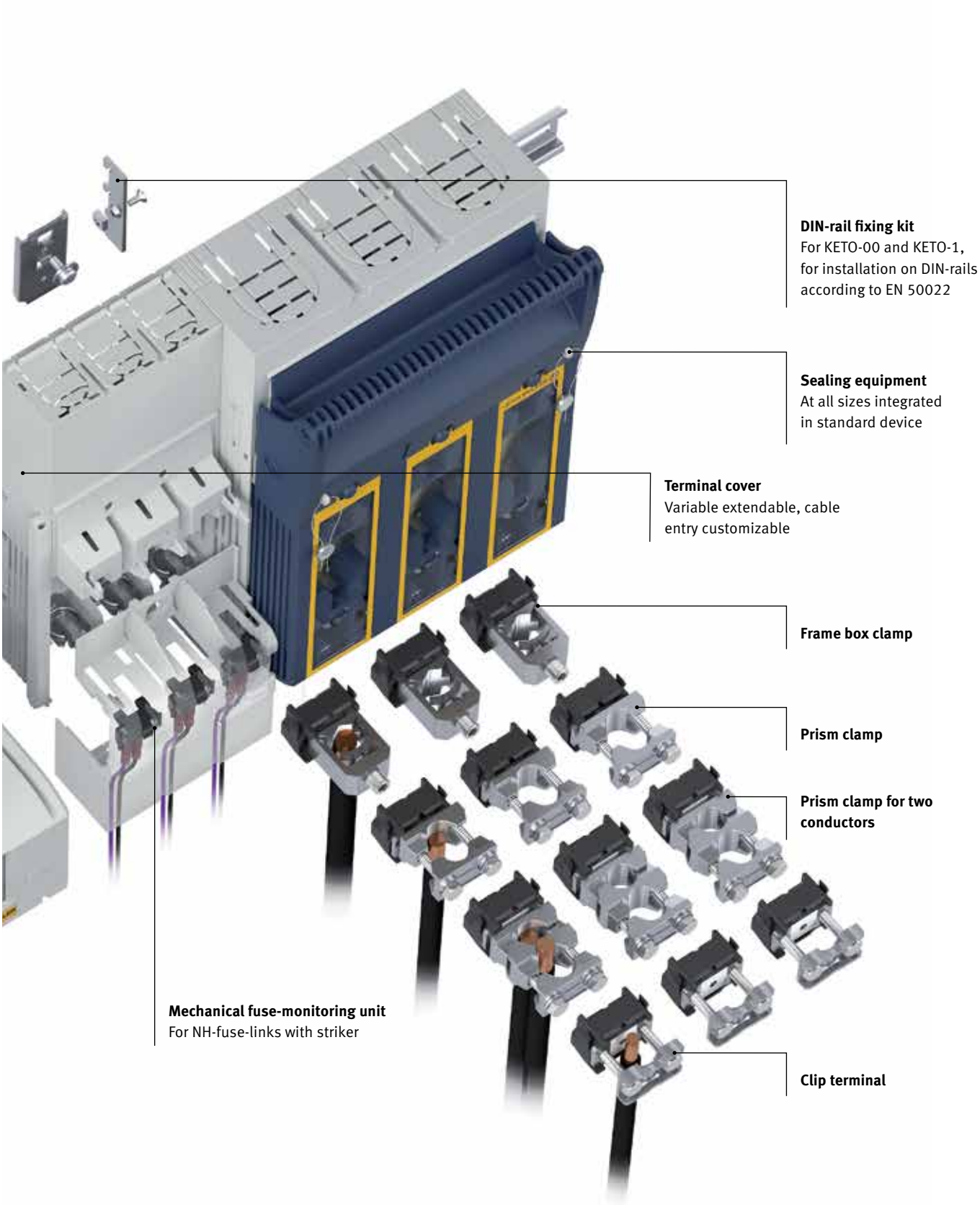

The terminal clamps can be retrofitted for connection type "F" and can be found in the accessories section page 59.

KETO RANGE

With composite terminal covers

5-10mm thick 60mm spacing busbar system disconnects

1-pole horizontal fuse disconnects — Busbar mount Fixing via bolt

Size	For Fuses	Current Rating (A)	Terminals	Connection Capacity (mm)	Part No.
00	DIN00 & DIN000	160	Flat terminal M8	max. 95	KETO-00-1/AOU/F

1-pole horizontal fuse disconnects — Busbar mount Fixing via bolt

Size	For Fuses	Current Rating (A)	Terminals	Connection Capacity (mm)	Part No.
00	DIN00 & DIN000	160	Box clamp	max. 95	KETO-00-1/AOU/F/SK

5-10mm thick 60mm spacing busbar system disconnects

Top or bottom feed

3-pole horizontal fuse disconnects — Busbar mount Fixing via bolt

Size	For Fuses	Current Rating (A)	Terminals	Connection Capacity (mm)	Part No.
00	DIN00 & DIN000	160	Flat terminal M8	max. 95	KETO-00-3/60/AOU/F
00	DIN00 & DIN000	160	Box clamp	1.5-95 Al/Cu	KETO-00-3/AOU/R95
1	DIN1	250	Flat terminal M10	max. 150	KETO-1-3/AOU/F
1	DIN1	250	Box clamp	35-150 Al/Cu	KETO-1-3/AOU/R150
2	DIN2	400	Flat terminal M10	max. 240	KETO-2-3/AOU/F
2	DIN2	400	Box clamp	95-300 Al/Cu	KETO-2-3/AOU/R300
3	DIN 2 & 3	630	Flat terminal M10	max. 300	KETO-3-3/AOU/F
3	DIN 2 & 3	630	Box clamp	95-300 Al/Cu	KETO-3-3/AOU/R300

5-10mm thick 60mm spacing busbar system disconnects

Top or bottom feed

Duel feed 3-pole horizontal fuse disconnects — Busbar mount Fixing via bolt

Size	For Fuses	Current Rating (A)	Terminals	Connection Capacity (mm)	Part No.
00	DIN00 & DIN000	160	Flat terminal M8	max. 95	KETO-3/60/AOU/F/EST
1	DIN1	250	Flat terminal M10	max. 150	KETO-1-3/60/AU/F/EST
2	DIN2	400	Flat terminal M10	max. 240	KETO-2-3/AO/F/EST
3	DIN 2 & 3	630	Flat terminal M10	max. 300	KETO-3-3/AO/F/EST

1-pole horizontal fuse disconnects — Base mount

Size	For Fuses	Current Rating (A)	Terminals	Connection Capacity (mm)	Part No.
00	DIN00 & DIN000	160	Flat terminal M8	max. 95	KETO-00-1/F
00	DIN00 & DIN000	160	Box clamp	1.5-95 Al/Cu	KETO-00-1/R95
1	DIN1	250	Flat terminal M10	max. 150	KETO-1-1/F
3	DIN 2 & 3	630	Flat terminal M10	max. 300	KETO-3-1/F

2-pole horizontal fuse disconnects — Base mount

Size	For Fuses	Current Rating (A)	Terminals	Connection Capacity (mm)	Part No.
00	DIN00 & DIN000	160	Flat terminal M8	max. 95	KETO-00-2/F
1	DIN1	250	Flat terminal M10	max. 150	KETO-1-2/F
3	DIN 2 & 3	630	Flat terminal M10	max. 300	KETO-3-2/F

3-pole horizontal fuse disconnects — Base mount

Size	For Fuses	Current Rating (A)	Terminals	Connection Capacity (mm)	Part No.
00	DIN00 & DIN000	160	Flat terminal M8	max. 95	KETO-00-3/F
00	DIN00 & DIN000	160	Box clamp	1.5-95 Al/Cu	KETO-00-3/R95
1	DIN1	250	Flat terminal M10	max. 150	KETO-1-3/F
1	DIN1	250	Box clamp	35-150 Al/Cu	KETO-1-3/R150
2	DIN2	400	Flat terminal M10	max. 240	KETO-2-3/F
2	DIN2	400	Box clamp	95-300 Al/Cu	KETO-2-3/R300
3	DIN 2 & 3	630	Flat terminal M10	max. 300	KETO-3-3/F
3	DIN 2 & 3	630	Box clamp	95-300 Al/Cu	KETO-3-3/R300

4-pole horizontal fuse disconnects — Base mount

Size	For Fuses	Current Rating (A)	Terminals	Connection Capacity (mm)	Part No.
00	DIN00 & DIN000	160	Flat terminal M8	max. 95	KETO-00-4/F
1	DIN1	250	Flat terminal M10	max. 150	KETO-1-4/F
3	DIN 2 & 3	630	Flat terminal M10	max. 300	KETO-3-4/F

Base mount only accessories - DIN rail fixing kits

Description	Part No.
For KETO-00	KETO-Z-00 100-15MM
For KETO-1	KETO-Z-1 100-150MM

Ganging kits (For making pole & 4 pole units)	Part No.
For KETO-00	KETO-VBS-00/2+4P
For KETO-1, 2 & 3	KETO-VBS-123/2+4P

Description	Part No.
Extension terminal covers if extra touch protection required.	
1-pole for KETO-00-1, Top & bottom, 36mm long	KETO-AA-00-1/36
1-pole for KETO-00-1, Top & bottom, 66mm long	KETO-AA-00-1/66
1-pole for KETO-1-1, Top & bottom, 42mm long	KETO-AA-1-1
1-pole for KETO-3-1, Top & bottom, 42mm long	KETO-AA-3-1
3-pole for KETO-00-3, Top & bottom, 36mm long	KETO-AA-00-3/36
3-pole for KETO-00-3, Top & bottom, 66mm long	KETO-AA-00-3/66
3-pole for KETO-1-3, Top & bottom, 42mm long	KETO-AA-1-3
3-pole for KETO-2-3, Top & bottom,42mm long	KETO-AA-2-3
3-pole for KETO-3-3, Top & bottom, 42mm long	KETO-AA-3-3
Busbar series busbar covers if extra touch protection required.	
For KETO-00-3-AOU, Top & bottom, 32 long	KETO-UGS-00-3/32
For KETO-1-3-AOU, Top & bottom, 32 long	KETO-UGS-1-3/32
For KETO-2-3-AOU, Top & bottom, 32 long	KETO-UGS-2-3/32
For KETO-3-3-AOU, Top & bottom, 32 long	KETO-UGS-3-3/32
Integral contact/terminal cover interlock	
For KETO-00,1,2 & 3 3P (Interlocks to cover needs a tool to remove)	KETO-VKA-00123-3
Padlock device	
For KETO-00,1,2 & 3 3P (6mm hole, allows to padlock closed)	KETO-ASV-00123-3
Switch position indicator (Micro-switch)	
For KETO-00 1 Pole - 1 micro-switch per pack (part)	KETO-EV-00/1
For KETO-00 3 Pole - 1 micro-switch per pack (part)	KETO-EV-00/3
For KETO-1, 2 & 3 Pole - 1 micro-switch per pack (part)	KETO-EV-123
Fuse blow indicator (Micro-switch)	
For KETO-00 - 3 micro-switch per pack (part)	KETO-K-00
For KETO-1, 2 & 3 - 3 micro-switch per pack (part)	KETO-K-123
Phase combi bars for KETO-00-3	
2 way 35mm3 200Amp	KETO-PHS-00-3/2/35
2 way 50mm2 200Amp	KETO-PHS-00-3/2/50
3 way 35mm2 200Amp	KETO-PHS-00-3/3/35
3 way 50mm2 200Amp	KETO-PHS-00-3/3/50
4 way 35mm2 200Amp	KETO-PHS-00-3/4/35
4 way 50mm2 200Amp	KETO-PHS-00-3/4/50
5 way 35mm5 200Amp	KETO-PHS-00-3/5/35
5 way 50mm2 200Amp	KETO-PHS-00-3/5/50
Feed connection clamp terminal lug	
For KETO-00, M8 fixing hole, 25-95mm2 Cu/Al	KETO-ESK-00/95

Description	Part No.
Clip terminals to modify KETO with bolt connections	
For KETO-00, 1.5-70mm2 Cu	500-Z
For KETO-1, 25-150mm2 Cu	S1
For KETO-2, 25-240mm2 Cu	S2
For KETO-3, 11x21mm Band Cu	S3
Prism clamp terminals to modify KETO with bolt connections	
For KETO-00, 10-70mm2 Al/Cu	P0070-Z
For KETO-1, 70-150mm2 Al/Cu	P1
For KETO-2, 120-240mm2 Al/Cu	P2
For KETO-3, 120-300mm2 Al/Cu	P3
Double Prism clamp terminals to modify KETO with bolt connections. Two cables	
For KETO-1, 2 x 70-150mm2 Al/Cu	P12
For KETO-2, 2 x 120-240mm2 Al/Cu	P22
For KETO-3, 2 x 120-300mm2 Al/Cu	P32
Frame (Box) clamp terminals to modify KETO with bolt connections	
For KETO-1, 35-150mm2 Al/Cu	KETO-R150
For KETO-2 & 3, 95-300mm2 Al/Cu	KETO-R300-2+3

TECHNICAL INFORMATION

NH fuse-switch-disconnectors KETO – Technical data

Type				KETO-00 Baseplate mounting		KETO-00 Busbar mounting	
Electrical characteristics	According to standard			DIN EN 60947-3			
	For NH fuse-links acc. to DIN VDE 0636-2	Size		000/00			
	Rated operational voltage	U_e	V	AC690 DC440			
	Rated operational current [1]	I_e	A	160			
	Conv. free air thermal current with fuse-links [1]	I_{th}	A	160			
	Conv. free air thermal current with solid-links [1]	I_{th}	A	210		On request	
	Rated frequency	f	Hz	50-60			
	Rated insulation voltage	U_i	V	AC800			
				1P	**3P**	**1P**	**3P**
	Total power loss at I_{th} (without fuse-links)	P_v	W	3	9	5	14
	Power loss at 80% I_{th} (without fuse-links) [2]	P_v	W	1.9	5.8	3	9
	Rated impulse withstand voltage	U_{imp}	kV	8			
	Utilization category [3]	-	-	AC-23B (400V/160A) AC-22B (500V/160A) AC-21B (690V/160A) DC-22B (250V/160A)			
	Rated conditional short-cirquit current [3] [4]	-	kA	120 (500V) 100 (690V)			
	Rated short-time withstand current	I_{cw}	kA	5/1s			
	Max. permis. power loss per fuse-link	P_a	W	12			

1) In case of mounting of several units in low voltage switchgear-combinations, please consider rated diversity factors acc. to DIN EN 61439.

2) Reference value for replacement of devices acc. to DIN EN 61439-1 clause 10.10.4.2.

3) It must be considered a minimum distance to earthed, conductive parts: Lateral: 20mm/Above: 50mm.

4) Type tested with NH fuse-links characteristic gG.

Type						KETO-00 Baseplate mounting	KETO-00 Busbar mounting
Cable terminal	Flat terminal		Bolt diameter	-	-	M8	
	Clip terminal	S00-70	Clamping cross-section	-	mm²	○ : 1.5-70 Cu □ : 6 x 9 x 0.8 Cu	
			Tightening torque	M_a	Nm	2.6	
	Clamp	P00-70 P00-95	Clamping cross-section	-	mm²	10-70 Al/Cu 35-95 Al/Cu	
			Tightening torque	M_a	Nm	2.6	
	Clamp	R95	Clamping cross-section		mm²	1.5-95 Al/Cu (Al 95: max. 125A) [6]	
			Tightening torque	M_a	Nm	4.5	
Degree of protection	Front side Device fitted		Operating condition	-	-	IP20	
			With clamp- and lateral cover	-	-	IP2XC	
			Switching element open	-	-	IP10	
Operating conditions	Ambient temperature [5]			T_{amb}	°C	-25 *up to* +70	
	Rated operating mode			-	-	Uninterrupted duty	
	Actuation			-	-	Dependent manual operation	
	Mounting position			-	-	vertical /horizontal	
	Altitude			-	m	Up to 2000	
	Pollution degree			-	-	3	
	Overvoltage category			-	-	III	

Annotation: ○ = Round conductor □ = Strip conductor

5) 35°C Normal temperature, above 35°C up to 70°C with reduces operating current.
6) Pretread Al-conductors mechanically! Cleaning and greasing!

NH fuse-switch-disconnectors KETO – Technical data

Type				KETO-1 Baseplate mounting		KETO-1 Busbar mounting	
Electrical characteristics	According to standard			DIN EN 60947-3			
	For NH fuse-links acc. to DIN VDE 0636-2	Size		1			
	Rated operational voltage	U_e	V	AC690 DC440			
	Rated operational current [1]	I_e	A	250			
	Conv. free air thermal current with fuse-links [1]	I_{th}	A	250			
	Conv. free air thermal current with solid-links [1]	I_{th}	A	325			
	Rated frequency	-	Hz	50-60			
	Rated insulation voltage	U_i	V	AC800			
				1P	**3P**	**1P**	**3P**
	Total power loss at I_{th} (without fuse-links)	P_v	W	5	15	7	22
	Power loss at 80% I_{th} (without fuse-links) [2]	P_v	W	3.2	9.6	4.7	14.1
	Rated impulse withstand voltage	U_{imp}	kV	8			
	Utilization category [3]	-	-	AC-23B (400V/250A) AC-22B (500V/250A) AC-21B (690V/250A) DC-22B (250V/250A) 3P: DC-21B (440V/250A)			
	Rated conditional short-cirquit current [3] [4]	-	kA	120 (500V) 100 (690V)			
	Rated short-time withstand current	I_{cw}	kA	8.6/1s			
	Max. permis. power loss per fuse-link	P_a	W	23			

1) In case of mounting of several units in low voltage switchgear-combinations, please consider rated diversity factors acc. to DIN EN 61439.

2) Reference value for replacement of devices acc. to DIN EN 61439-1 clause 10.10.4.2.

3) It must be considered a minimum distance to earthed, conductive parts: Lateral: 20mm/Above: 50mm.

4) Type tested with NH fuse-links characteristic gG.

Type						KETO-1 Baseplate mounting	KETO-1 Busbar mounting
Cable terminal	Flat terminal		Bolt diameter	-	-	M10	
			Tightening torque	M_a	Nm	30-35	
	Clip terminal	S1	Clamping cross-section	-	mm^2	◯ : 25-150 Cu □ : 6 x 16 x 0.8 Cu	
			Tightening torque	M_a	Nm	9.5	
	Clamp	P1	Clamping cross-section	-	mm^2	10-150 Al/Cu	
			Tightening torque	M_a	Nm	4.5	
	Clamp	P12	Clamping cross-section	-	mm^2	2 x (10-150) Al/Cu	
			Tightening torque	M_a	Nm	4.5	
		R150	Clamping cross-section	-	mm^2	35-150 Al/Cu	
			Tightening torque	M_a	Nm	12	
Degree of protection	Front side Device fitted		Operating condition	-	-	IP20	
			With clamp- and lateral cover	-	-	IP2XC	
			Switching element open	-	-	IP10	
Operating conditions	Ambient temperature [5)]			T_{amb}	°C	-25 *up to* +70	
	Rated operating mode			-	-	Uninterrupted duty	
	Actuation			-	-	Dependent manual operation	
	Mounting position			-	-	vertical /horizontal	
	Altitude			-	m	Up to 2000	
	Pollution degree			-	-	3	
	Overvoltage category			-	-	III	

Annotation: ◯ = Round conductor □ = Strip conductor

5) 35°C Normal temperature, above 35°C up to 70°C with reduces operating current.

NH fuse-switch-disconnectors KETO – Technical data

Type				KETO-2 Baseplate mounting	KETO-2 Busbar mounting
Electrical characteristics	According to standard			DIN EN 60947-3	
	For NH fuse-links acc. to DIN VDE 0636-2	Size		2	
	Rated operational voltage	U_e	V	AC690 DC440	
	Rated operational current [1]	I_e	A	400	
	Conv. free air thermal current with fuse-links [1]	I_{th}	A	400	
	Conv. free air thermal current with solid-links [1]	I_{th}	A	520	
	Rated frequency	f	Hz	50-60	
	Rated insulation voltage	U_i	V	AC1000	
	Total power loss at I_{th} (without fuse-links)	P_v	W	28	36
	Power loss at 80% I_{th} (without fuse-links) [2]	P_v	W	17.9	23
	Rated impulse withstand voltage	U_{imp}	kV	8	
	Utilization category [3]	-	-	AC-23B (400V/400A) AC-22B (500V/400A) AC-21B (690V/400A) DC-22B (440V/400A)	
	Rated conditional short-cirquit current [3] [4]	-	kA	120 (500V) 100 (690V)	
	Rated short-time withstand current	I_{cw}	kA	15/1s	
	Max. permis. power loss per fuse-link	P_a	W	34	

1) In case of mounting of several units in low voltage switchgear-combinations, please consider rated diversity factors acc. to DIN EN 61439.
2) Reference value for replacement of devices acc. to DIN EN 61439-1 clause 10.10.4.2.
3) It must be considered a minimum distance to earthed, conductive parts: Lateral: 20mm/Above: 50mm.
4) Type tested with NH fuse-links characteristic gG.

Type						KETO-2 Baseplate mounting / KETO-2 Busbar mounting
Cable terminal	Flat terminal		Bolt diameter	-	-	M10
			Tightening torque	M_a	Nm	30-35
	Clip terminal	S2	Clamping cross-section	-	mm²	◯: 25-185 Cu □: 10 x 16 x 0.8 Cu
			Tightening torque	M_a	Nm	23
	Clamp	P2	Clamping cross-section	-	mm²	120-240 Al/Cu
			Tightening torque	M_a	Nm	11
	Clamp	P22	Clamping cross-section		mm²	2 x (120-150) Al/Cu
			Tightening torque	M_a	Nm	11
		R300	Clamping cross-section		mm²	95-300 Al/Cu
			Tightening torque	M_a	Nm	20
Degree of protection	Front side Device fitted		Operating condition	-	-	IP20
			With clamp- and lateral cover	-	-	IP2XC
			Switching element open	-	-	IP10
Operating conditions	Ambient temperature [5)]			T_{amb}	°C	-25 *up to* +70
	Rated operating mode			-	-	Uninterrupted duty
	Actuation			-	-	Dependent manual operation
	Mounting position			-	-	vertical /horizontal
	Altitude			-	m	Up to 2000
	Pollution degree			-	-	3
	Overvoltage category			-	-	III

Annotation: ◯ = Round conductor □ = Strip conductor

5) 35°C Normal temperature, above 35°C up to 70°C with reduces operating current.

NH fuse-switch-disconnectors KETO – Technical data

Type				KETO-3 Baseplate mounting		KETO-3 Busbar mounting	
Electrical characteristics	According to standard			DIN EN 60947-3			
	For NH fuse-links acc. to DIN VDE 0636-2	Size		3			
	Rated operational voltage	U_e	V	AC690 DC440			
	Rated operational current [1]	I_e	A	630			
	Conv. free air thermal current with fuse-links [1]	I_{th}	A	630			
	Conv. free air thermal current with solid-links [1]	I_{th}	A	910		On request	
	Rated frequency	f	Hz	50-60			
	Rated insulation voltage	U_i	V	AC1000			
				1P	**3P**	**1P**	**3P**
	Total power loss at I_{th} (without fuse-links)	P_v	W	17	51	7	86
	Power loss at 80% I_{th} (without fuse-links) [2]	P_v	W	10.9	32.6	18.3	55
	Rated impulse withstand voltage	U_{imp}	kV	8			
	Utilization category [3]	-	-	AC-23B (400V/630A) AC-22B (500V/630A) AC-21B (690V/630A) DC-21B (250V/630A) 3P: DC-22B (440V/630A)			
	Rated conditional short-cirquit current [3] [4]	-	kA	120 (500V) 100 (690V)			
	Rated short-time withstand current	I_{cw}	kA	15kA/1s			
	Max. permis. power loss per fuse-link	P_a	W	48			

1) In case of mounting of several units in low voltage switchgear-combinations, please consider rated diversity factors acc. to DIN EN 61439.

2) Reference value for replacement of devices acc. to DIN EN 61439-1 clause 10.10.4.2.

3) It must be considered a minimum distance to earthed, conductive parts: Lateral: 20mm/Above: 50mm.

4) Type tested with NH fuse-links characteristic gG.

Type						KETO-3 Baseplate mounting	KETO-3 Busbar mounting
Cable terminal	Flat terminal		Bolt diameter	-	-	M10/12	
			Tightening torque	M_a	Nm	30-35	
	Clip terminal	S3	Clamping cross-section	-	mm²	□: 11 x 21 x 1 Cu	
			Tightening torque	M_a	Nm	23	
	Clamp	P3	Clamping cross-section	-	mm²	120-300 Al/Cu	
			Tightening torque	M_a	Nm	11	
	Clamp	P32	Clamping cross-section		mm²	2 x (120-240) Al/Cu	
			Tightening torque	M_a	Nm	11	
		R300	Clamping cross-section		mm²	95-300 Al/Cu	
			Tightening torque	M_a	Nm	20	
Degree of protection	Front side Device fitted		Operating condition	-	-	IP20	
			With clamp- and lateral cover	-	-	IP2XC	
			Switching element open	-	-	IP10	
Operating conditions	Ambient temperature [5]			T_{amb}	°C	-25 *up to* +70	
	Rated operating mode			-	-	Uninterrupted duty	
	Actuation			-	-	Dependent manual operation	
	Mounting position			-	-	vertical /horizontal	
	Altitude			-	m	Up to 2000	
	Pollution degree			-	-	3	
	Overvoltage category			-	-	III	

Annotation: ○ = Round conductor □ = Strip conductor

5) 35°C Normal temperature, above 35°C up to 70°C with reduces operating current.

DIMENSIONS

Part No.	Part No.
KETO-00-3/F	KETO-00-3/F/ESL
KETO-00-3/R95	KETO-00-3/R95/ESL

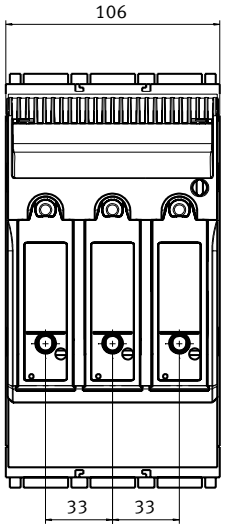

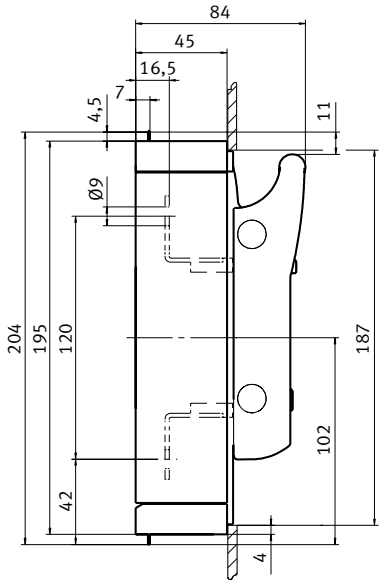

Part No.	Part No.
KETO-1-3/F/(ESL)	KETO-2-3/R300/(ESL)
KETO-1-3/R150/(ESL)	KETO-3-3/F/(ESL)
KETO-2-3/F/(ESL)	KETO-3-3/R300/(ESL)

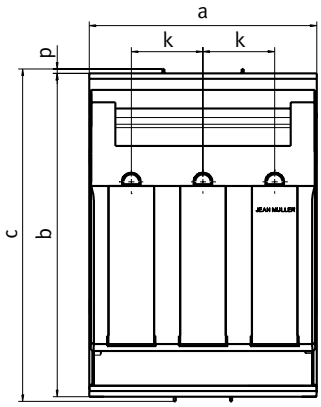

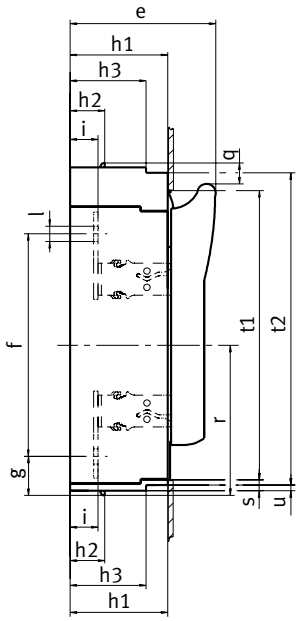

Type	a	b	c	e	f	g	h1	h2	h3	i	k	l	p	q	r	s	t1	t2	u
KETO-1-3	184	298	306	117	185	46	70	32	–	25	58	Ø10,5	4	19	138	5	272	–	–
KETO-2-3	210	298	306	134	205	36	90	32	70	26	66	Ø14	4	19	138	10	268	288	5
KETO-3-3	250	298	306	143	205	36	90	32	70	26	82	Ø14	4	19	138	10	268	288	5

Part No.
KETO-00-1/F
KETO-00-2/F
KETO-00-1/R95

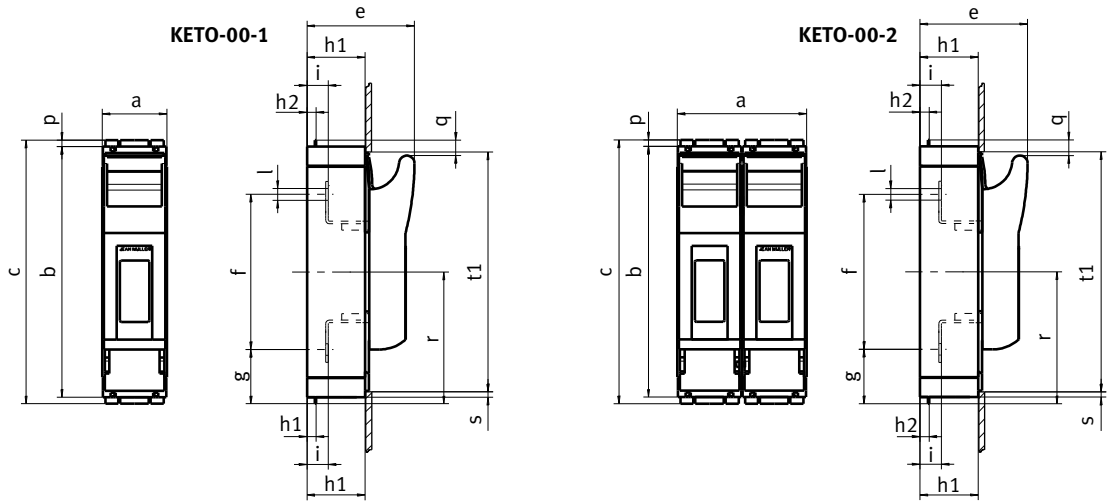

Type	a	b	c	e	f	g	h1	h2	h3	i	l	p	q	r	s	t1
KETO-00-1	50	195	204	84	120	42	45	7	–	16,5	Ø9	4,5	12	102	5	187
KETO-00-2	100	195	204	84	120	42	45	7	–	16,5	Ø9	4,5	12	102	5	187

Part No.	Part No.
KETO-1-1/F	KETO-3-1/F

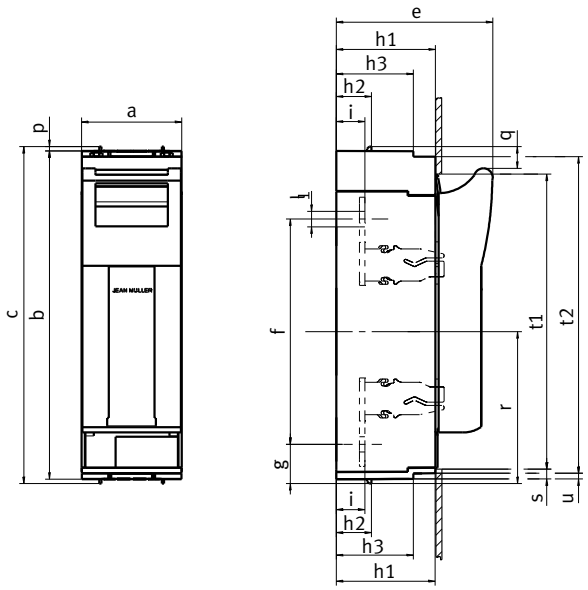

Type	a	b	c	e	f	g	h1	h2	h3	i	l	p	q	r	s	t1	t2	u
KETO-1-1	69	298	306	117	185	46	70	32	–	25	Ø10,5	4	19	138	5	272	–	–
KETO-3-1	91	298	306	143	205	36	90	32	70	26	Ø14	4	19	138	10	268	288	5

Part No.	Part No.
KETO-1-2/F	KETO-3-2/F

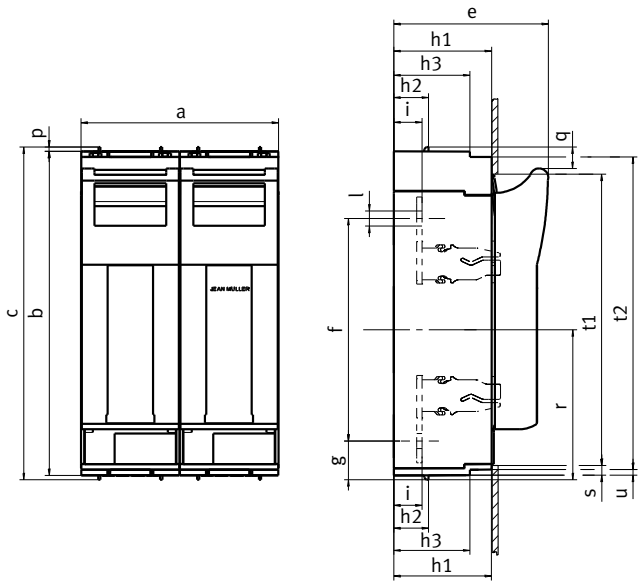

Type	a	b	c	e	f	g	h1	h2	h3	i	l	p	q	r	s	t1	t2	u
KETO-1-2	138	298	306	117	185	46	70	32	–	25	Ø10,5	4	19	138	5	272	–	–
KETO-3-2	182	298	306	143	205	36	90	32	70	26	Ø14	4	19	138	10	268	288	5

Part No.
KETO-00-4/F

Type	a	b	c	e	f	g	h1	h2	h3	k1	k2	i	l	p	q	r	s	t1	t2	u
KETO-00-4	156	195	204	84	120	42	45	7	–	33	45	16,5	Ø9	4,5	12	102	5	187	–	–

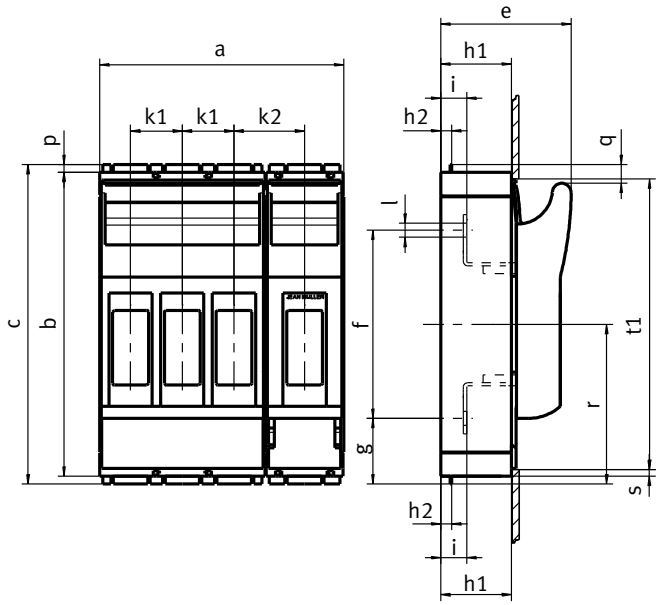

Part No.	Part No.
KETO-1-4/F	KETO-3-4/F

Type	a	b	c	e	f	g	h1	h2	h3	k1	k2	i	l	p	q	r	s	t1	t2	u
KETO-1-4	254	298	306	117	185	46	70	32	–	58	69	25	Ø10,5	4	19	138	5	272	–	–
KETO-3-4	341,5	298	306	143	205	36	90	32	70	82	89	26	Ø14	4	19	138	10	268	288	5

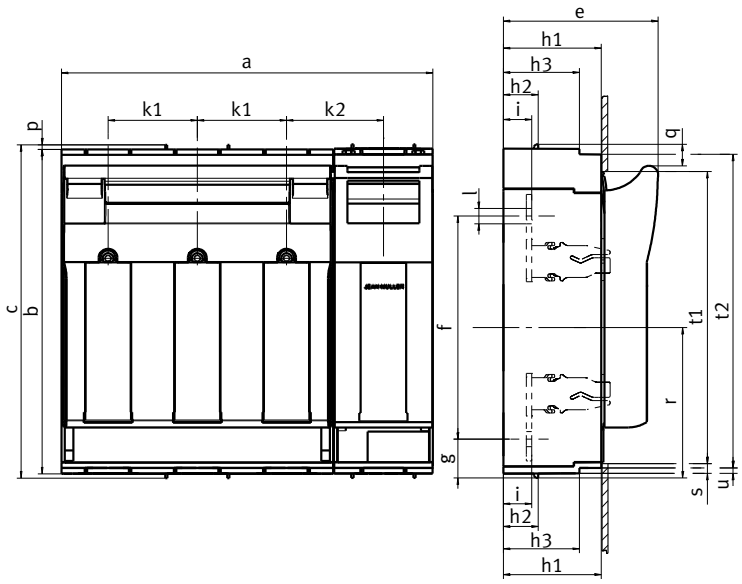

Part No.
KETO-00-3/60/AOU/F/(ESL, EST)
KETO-00-3/60/AOU/R95/(ESL, EST)

Terminal at topside

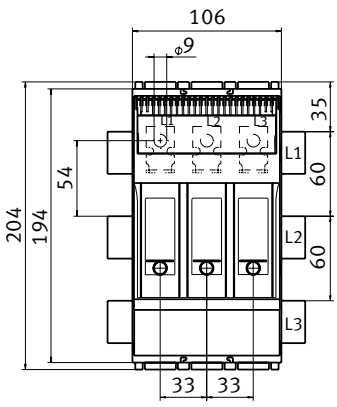

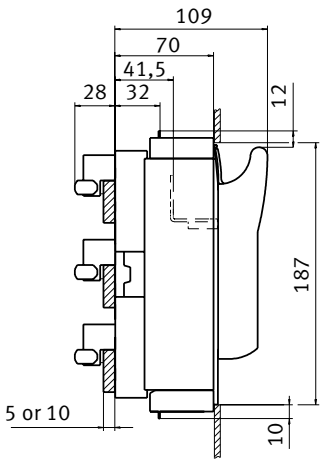

Terminal at bottom side

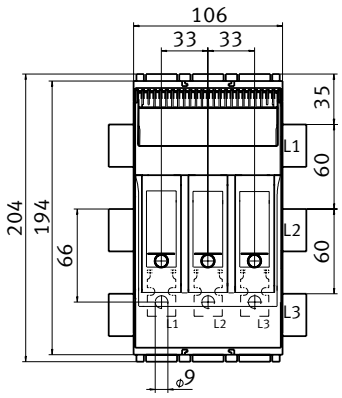

Part No.
KETO-00-3/60/AOU/R95T/(ESL)

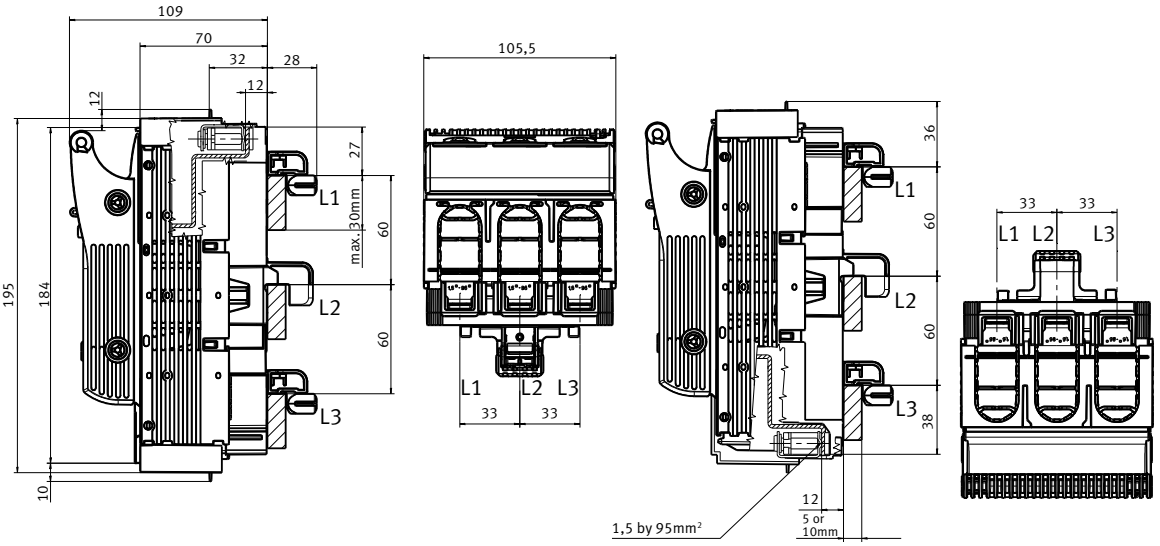

Part No.	Part No.
KETO-1-3/60/AOU/F/(ESL, EST)	KETO-2-3/60/AOU/R300/(ESL, EST)
KETO-1-3/60/AOU/R150/(ESL, EST)	KETO-3-3/60/AOU/F/(ESL, EST)
KETO-2-3/60/AOU/F/(ESL, EST)	KETO-3-3/60/AOU/R300/(ESL, EST)

Terminal at bottom side

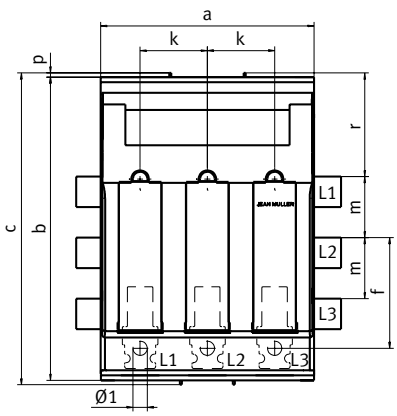

Terminal at bottom side

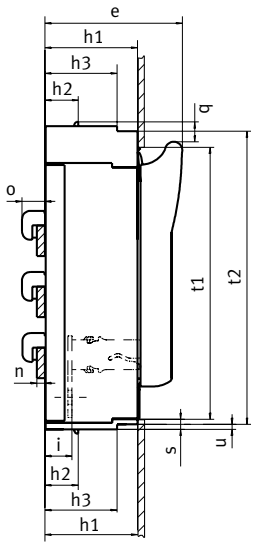

Type	a	b	c	e	f-Au	a-Ao	h1	h2	h3	i	k	l	m	n	o	p	q	r	s	t1	t2	u
KETO-1-3	184	298	306	117	98	87	70	32	–	25,5	58	Ø10,5	60	4-10	25	4	19	102	5	272	–	–
KETO-2-3	210	298	306	135	109	96	90	32	70	26,5	66	Ø14	60	4-10	25	4	19	102	10	268	289	5
KETO-3-3	250	298	306	143	109	96	90	32	70	26,5	82	Ø14	60	4-10	25	4	19	102	10	268	289	5

Part No.	Part No.
KETO-00-1/AOU/F	KETO-00-1/AOU/F/SK
KETO-00-1/AOU/R95	KETO-00-1/AOU/R95/SK

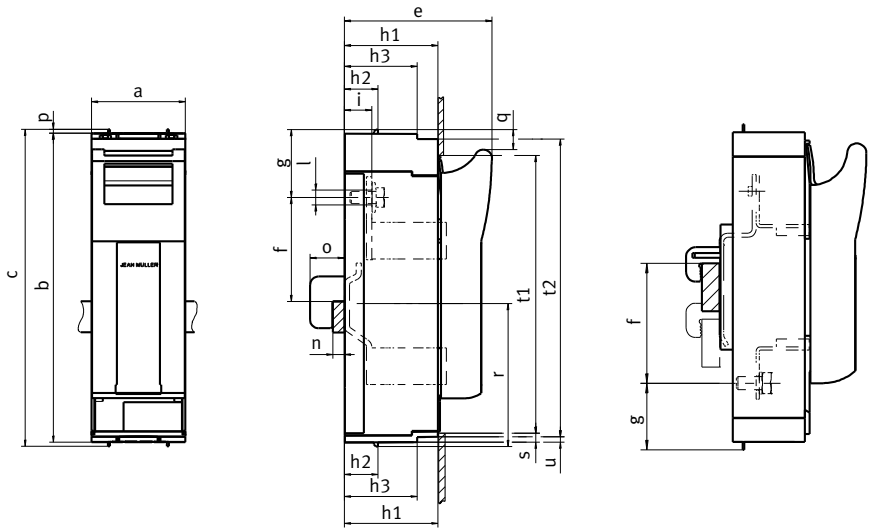

Type	a	b	c	e	f-Ao	f-Au	g-Ao	g-Au	h1	h2	i	l	n	o	p	q	r	s	t1
KETO-00-1	50	195	204	92	45,50,55 ... 75	75,70,65 ... 45	42	42	53	15	24,5	Ø9	4-10	22	4,5	12	102	5	187

Part No.	Part No.
KETO-1-1/AOU/F	KETO-1-1/AOU/F/SK
KETO-3-1/AOU/F	KETO-3-1/AOU/F/SK

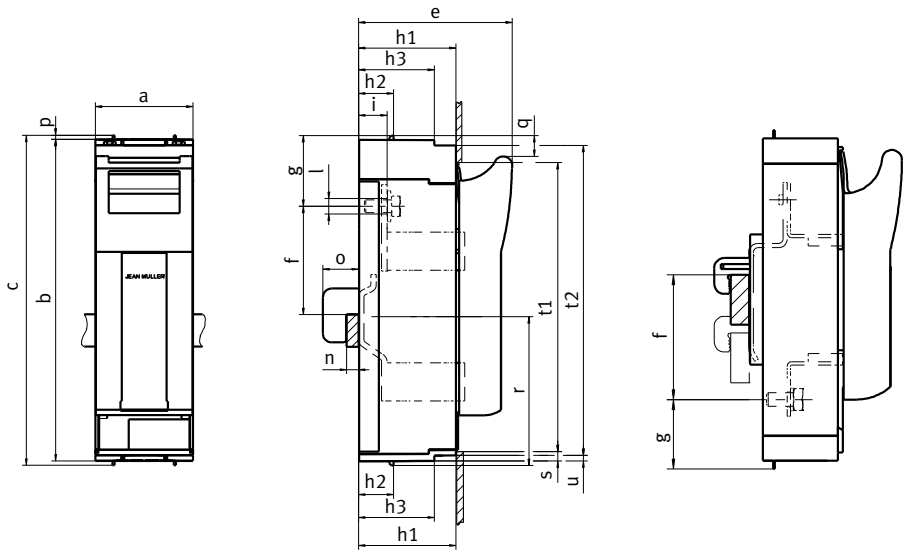

Type	a	b	c	e	f-Ao	f-Au	g-Ao	g-Au	h1	h2	h3	i	l	n	o	p	q	r	s	t1	t2	u
KETO-1-1	69	298	306	117	93	93	76	44	70	32	–	25,5	Ø10,5	5-10	33	4	19	138	5	272	–	–
KETO-3-1	91	298	306	143	100	104	66	36	90	32	70	26,5	Ø14	5-10	33	4	19	138	10	268	289	5

Part No.	Part No.
AA-KETO-00-3/36	AA-KETO-00-3/66

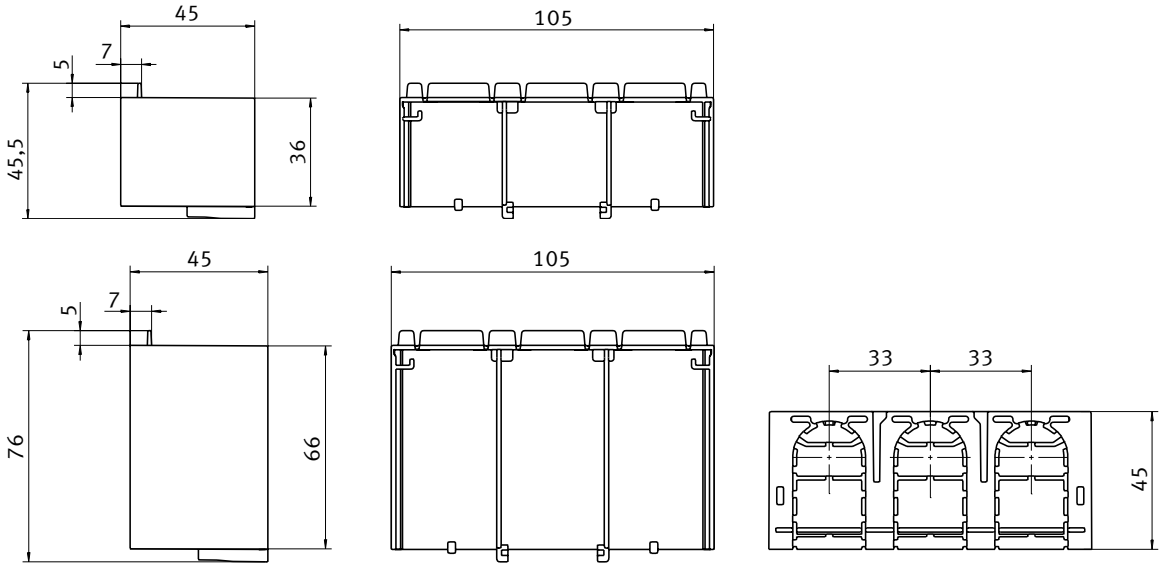

Part No.
AA-KETO-1-3
AA-KETO-2-3
AA-KETO-3-3

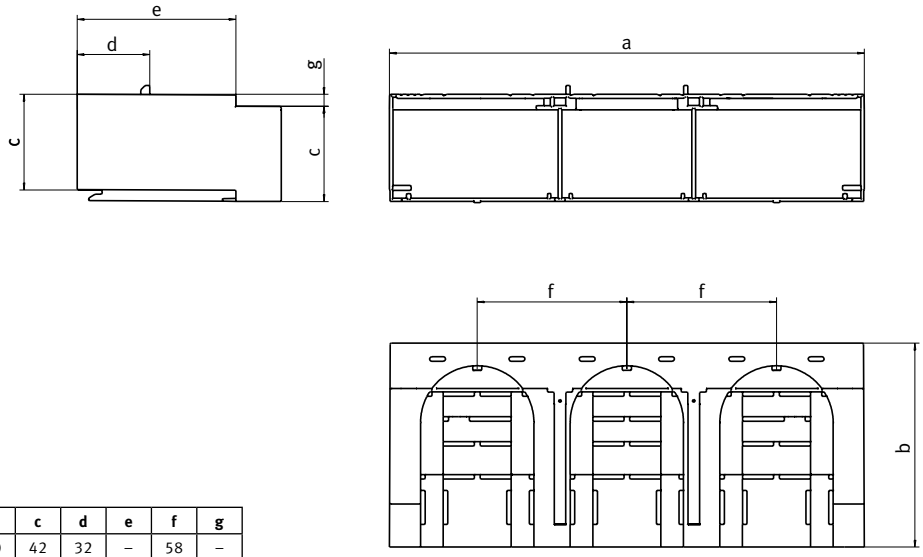

Type	a	b	c	d	e	f	g
AA-KETO-1-3	184	70	42	32	–	58	–
AA-KETO-2-3	210	90	42	32	70	66	5
AA-KETO-3-3	250	90	42	32	70	82	5

Part No.	Part No.
ARV-KETO-00-3/39-34	ARV-KETO-00-3/32

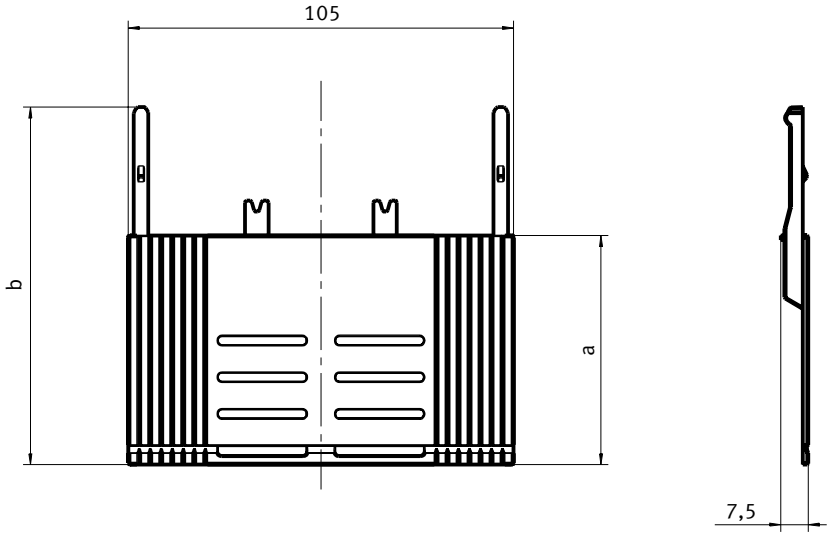

Type	a	b
ARV-KETO-00-3/39-34	62,5	97,5
ARV-KETO-00-3/32	55,5	90,5

Part No.	Part No.
UGS-KETO-00-3/39-34	UGS-KETO-00-3/32

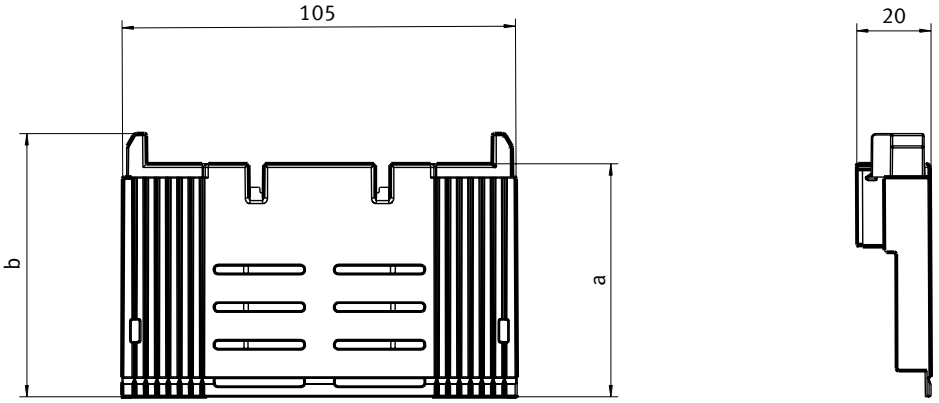

Type	a	b
UGS-KETO-00-3/39-34	62	70
UGS-KETO-00-3/32	55	63

Part No.	Part No.
UGS-KETO-1-3/32	UGS-KETO-2-3/39-34
UGS-KETO-1-3/39-34	UGS-KETO-3-3/32
UGS-KETO-2-3/32	UGS-KETO-3-3/39-34

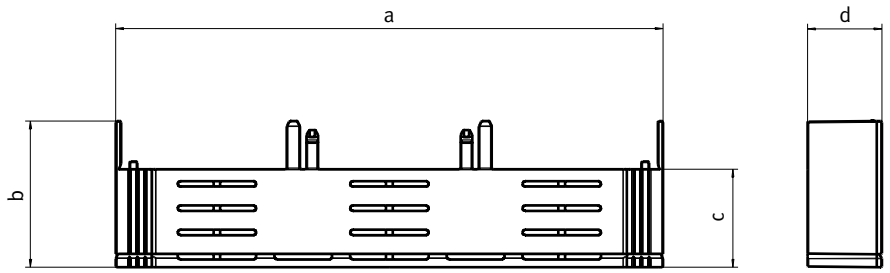

Type	a	b	c	d
UGS-KETO-1-3/32	184	51,5	30,5	16
UGS-KETO-1-3/39-34	184	58,5	37,5	16
UGS-KETO-2-3/32	210	49	30,5	28,5
UGS-KETO-2-3/39-34	210	56	37,5	28,5
UGS-KETO-3-3/32	250	49	30,5	28,5
UGS-KETO-3-3/39-34	250	56	37,5	28,5

Part No.	Part No.
AA-KETO-00-1/66	AA-KETO-00-1/36

AA-KETO-00-1/66

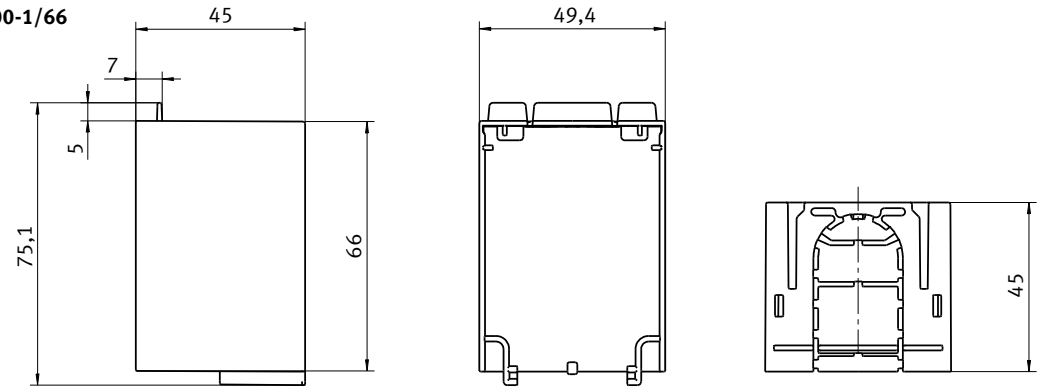

AA-KETO-00-1/36

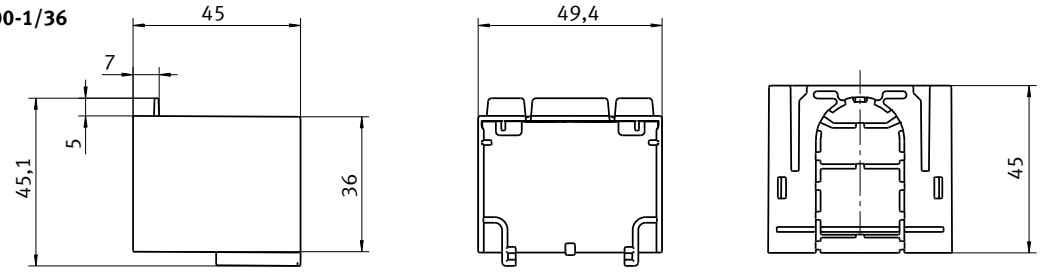

Part No.	Part No.
AA-KETO-1-1	AA-KETO-3-1

AA-KETO-1-1

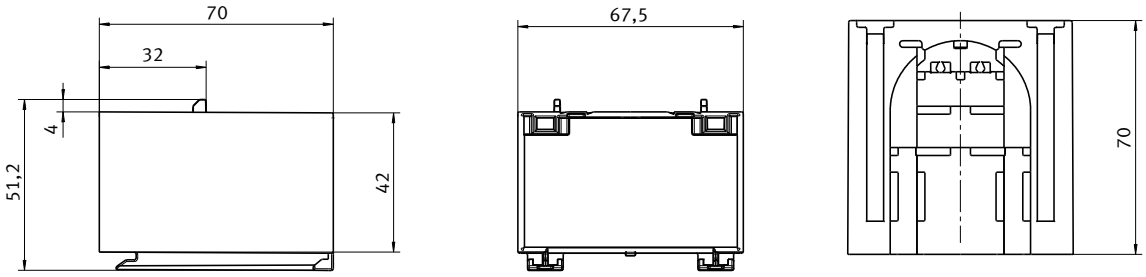

AA-KETO-3-1

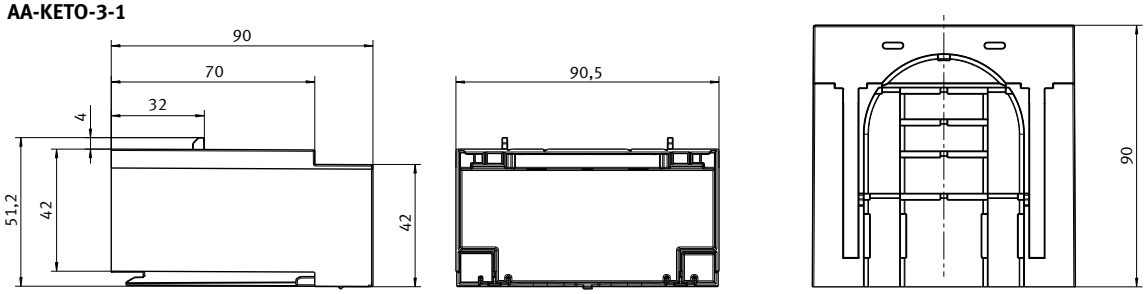

Horizontal fuse disconnects

Horizontal fuse disconnects

Horizontal fuse Disconnects are used in building installations, switchgear and controlgear as well as in power utility networks. The contact system enables safe load break operation using the fuse-links as moving contacts.

The product is safe against finger-touch in closed position and provides a safe and visible isolating distance in open position. Different versions for baseplate mounting, DIN-rail or busbar mounting are available to fit a variety of applications.

Product definition

Horizontal fuse disconnect according to EN60947-3 are single-pole or multipole NH fuse-bases arranged horizontally and equipped with a common fuse-carrier.

Incoming and outgoing contacts are accessible from outside and fitted with terminals for the connection of cables or bars. The feeder side of fuse-switches for busbar mounting is designed to provide mechanical and electrical connection to standardised busbar systems.

Applications

Its compact design makes the horizontal fuse disconnect a perfect feeder switch in low voltage distribution panels, as well as a protective device mounted on standardized busbar systems having 40mm, 60mm or 100mm busbar distance or for meter protection in domestic buildings. Single-pole and two-pole fuse-switches are used for UPS battery protection or in telecom power supplies e.g. 4-pole fuse-switches can be used to disconnect secondary power generators from public networks.

Product advantages

JEAN MÜLLER offers NH fuse-switches in sizes 000 and 4a. The switch size 4a is available in single-pole up to 4-pole design. Executions for baseplate mounting as well as for busbar mounting are available in all sizes. Thanks to the wide product range, tailor-made solutions with respect to current rating, voltage rating and mode of installation can be found for nearly every application.

Insulation parts

Similar to the vertical fuse disconnects all products from size 1 and above, contain only thermosetting materials for insulators supporting live parts because of their high dimensional stability and superior resistance to tracking.

Current carrying parts

Products having rated currents of 400A and above, are equipped with Q-contacts for quasi-independent operation. Q-contacts ensure high short-circuit capability up to 80kA and safe load-break operation. Particularly NH fuse-switches for busbar mounting without separate adapters exhibit very low values for power loss due to their short connecting bars.

Versions/Accessories

Monitoring components allow remote monitoring of switch-position as well as of fuse-links. Mircoswitches or electronic components will be used for fuse monitoring, depending on the application.

Special executions enable size 00 fuse-switches up to 800A rated current in combination with the corresponding fuse-links, thus providing significant savings in space.

1-pole and 3-pole disconnectors up to 1200V, protected against direct access to live parts and safe in operation, provide electric protection of solar power installations.

Horizontal fuse disconnects for panel mounting

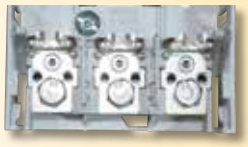

General-purpose terminal

- All sizes are equipped with general-purpose flat terminals for cable lugs and direct terminal clamps

Reliable overreach protection

- Optimum touch protection including when feeding from bottom side by retrofit overreach protector

High short-circuit capability

- Fuse protected conditional short-circuit current up to 80kA
- 35kA/1s short-circuit withstand when equipped with solid links

Terminal covers (sold separately) are required for all disconnects (refer to page 86)

1 pole horizontal fuse disconnects

Size	For Fuses	Current Rating (A)	Terminal	Connection Capacity(mm²)	Part No.
000	DIN 000	100	Flat terminal M8	max. 95	LTL000-1/9
4A	DIN4A	1250	Flat terminal M16	max. 400	LTL4A-1/9/1250
4A	DIN4A	1600	Flat terminal 2x M12		LTL4A-1/9/1600

3 pole and 4 pole horizontal fuse disconnects

Size	For Fuses	Current Rating (A)	Terminal	Connection Capacity(mm²)	Part No.
000	DIN000	160	Flat terminal M8	max. 95	LTL000-3/9
4A	DIN4A	1250	Flat terminal 1xM16	max. 400	LTL4A-3x3/9/1250
4A	DIN4A	1600	Flat terminal 2xM12		LTL4A-3x3/9/1600

Note: for sizes 00 (160A), 1 (250A), 2 (400A), and 3 (630A), refer Keto.

Horizontal fuse disconnects for busbar mounting

Adaptor free installation

- Small installation depth and direct busbar connection ensure low power loss

Compact size 000 fuse-switch

- Space saving 63mm width
- Easy snap-on technique without screws
- For busbars having 5mm or 10mm thickness

Terminal covers (sold separately) are required for all disconnects (refer to page 86)

3 pole horizontal fuse disconnects - 60mm centres busbar mount

Size	For Fuses	Current Rating (A)	Cable Connection	Connection Capacity(mm²)	Connection to Busbars	Part No.
000	DIN000	100	Bottom clamp	1.5 - 50	Snap-on	LTL000-3/9/60/ AU/F57/5

Note: for sizes 00 (160A), 1 (250A), 2 (400A), and 3 (630A), refer Keto.

Horizontal fuse disconnects - Special versions

Fuse-switch-disconnectors for baseplate monitoring

- For fuse-protected feeding of plug-in modules
- Fast module changing without cable disconnecting

Disconnectors rated 1000V and above

- Proven technology for reliable operation of switchgear rated 1000V and above

Space-saving protection of DC-systems up to 1000V

- 1-pole disconnector for safe feeding of photovoltaic installations

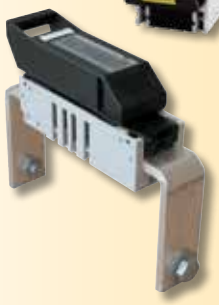

Compact switching devices up to DC 250V rating

- Minimum space required for fuse protection up to 800A with LTT size 00
- Versions for baseplate and busbar mounting as well as feeding on rear side

Terminal covers (sold separately) are required for all disconnects (refer to page 86)

1 pole horizontal fuse disconnects for telecom supplies up to 250V DC base mounting

Size	For Fuses	Current Rating (A)	Connection	Terminal	Part No.
00	DC	800	Top and bottom	Flat Terminal M12	LTT00-1/9
00	DC	800	Rear	Flat Terminal M12	LTT00-1/9R
00	DC	800	Top and Bottom 2 Pole	Flat Terminal M12	LTT00-2/9

LTT00-1/9

LTT00-1/9R

LTT00-2/9

Accessories

	Description	Size	Part No.
	Clamp terminal		
	1,5-70 mm² Cu	LTL00	S00
	25-150 mm² Cu	LTL1	S1
	25-240 mm² Cu	LTL2	S2
	Bar 11 x 21	LTL3	S3
	Prism clamp		
	10-70 mm² Al/Cu	LTL00	P0070
	70-150 mm² Al/Cu	LTL1	P1
	120-240 mm² Al/Cu	LTL2	P2
	120-300 mm² Al/Cu	LTL3	P3
	Prism clamp for 2-conductors connection		
	2 x 70-150 mm² Al/Cu	LTL1	P12
	2 x 120-240 mm² Al/Cu	LTL2	P22
	2 x 120-300 mm² Al/Cu	LTL3	P32
	Switch position indicator		
	1- and 3- pole	LTL00	EV-LTL00
	1- and 2-pole	LTL1-3	EV-LTL123-1
	3-pole	LTL1-3	EV-LTL123-3
	Switch position indicator or fuse blown indicating microswitch		
	1- and 3- pole	LTL4a	K/EV-LTL/SLTL4A
	Fuse blown indicating microswitch (use with striker fuses)		
	1-pole	LTL00	K-LTL00-1/H
	1-pole	LTL1	K-LTL1-1/H
	1-pole	LTL3	K-LTL3-1/H
	3-pole	LTL00	K-LTL00-3/H
	3-pole	LTL1	K-LTL1-3/H
	3-pole	LTL2	K-LTL2-3/H
	3-pole	LTL3	K-LTL3-3/H
	Protective cover, 3-pole, baseplate mounting		
	Top and bottom side	LTL000	GOU-LTL000-3
	Top and bottom side	LTL4	GOU-LTL4-3
	DIN Rail Mounting Kit		
	For mounting of NH fuse-switch-disconnectors on DIN rails acc. to EN 50022	LTL00	Z-LTL00-3

TECHNICAL INFORMATION

LTL NH fuse switch-disconnector specification

		Unit	LTL000	LTL000 Busbar	LTL4a-1250	LTL4a-1600
Accord to standard			EN60947-3			
For NH fuse link			000	000	4a	
Rated operational Voltage		V	AC690 DC220	AC500 DC220	AC690	AC690
Rated operational Current		A	160	125	1250	1600
Thermal rating with fuse links		A	160	125	1250	1600
Thermal rating with solid links		A	160	160	1250	1600
Rated frequency		Hz	40-60			
Rated AC insulation		V	AC690	AC500	AC800	
Power loss at max current not including fuse or link		W	7	18	32	52
Power loss at 80% max current not including fuse or link		W	4.5	11.5	20.5	33.3
Rated withstand voltage		kV	8			
Utilisation category	AC-22B 400V		160A			
	AC-22B 500V		100A	125A	1250A	1600A
	AC-22B 690V					
	AC-21B 690V		125A		1000A	1000A
	DC-21B 440V					
	DC-22B 220V			100A		
No switching under load	DC-20B 1000V				1250A	1600A
Rated conditional short circuit current		kA	63	50	35	35
Max. power loss per fuse link		W	10	8	110	164
Flat Bolt terminal	Bolt Diameter		M8		M16	2xM12
	Cable lug	mm2	1x10-70		400	400
	Flat bar	mm			80x30	80x30
	Tightening Torque	Nm	12-15		50-60	35-40
Clamp S type copper			S000-16 S000-50	F50		
Cu	Cross Section	mm2	6-16 25-50	1.5-50		
Tightening torque		Nm	2.6	2.6		
Clamp P type copper & aluminium	Single		P000-35 P000-70			
	Double		P000-2-35 P000-2-50			
Cu/Al	Cross section	mm2	10-35 50-70			
	Double Clamp		2x25-35Cu 2x50 Cu			
Tightening torque		Nm	4.5			
Front side IP	Closed Position		IP20			
	Open position		IP10			
Operating temperature		C	-25/+70			
Actuation			Dependent manual operation			
Mounting position			Vertical or horizontal			
Altitude		M	Up to 2000			
Pollution degree			3			
Overvoltage category			III			

Accessories - Micro switches			
Switch Position Indicator Fuse Blown Position Indicator		EV-LT00, EV-LTL123-1 K-LTL**-1/H	EV-LTL123-3, EV-LTL4A K-LTL**-3/H, K-LTL4A
Rated Current @ 250V AC	A	5	5
Rated Current @ 110V DC	A	0.35	0.35

Terminal with connecting lug						
	AL/Cu Cable [mm^2]				Allen Key	Tightening Torque (Nm)
	Rounded Stranded	Sector Stranded	Round Solid	Sector Solid		
K2G/A	50-185	70-240	50-185	70-240	6 mm	40
KM2G/AF3040	25-300	25-240	25-150	25-240	6 mm	32
K2HG/2/AF30	2 x 25-120	2 x 35-120	2 x 25-50	2 x 50-120	6 mm	40
KV2HG/2/AF30	2 x 12 -185	2 x 12-185	-	-	6 mm	40

Fuse switches DIN-Rail mount			
		WH-AMB1/10 WH-AMB3/10	WH-AMB1/22 WH-AMB3/22
Rated Current @ 690V AC @ 440V DC		32A 32A	125A 125A
Application Category		AC-22B (400V)	AC-20B (690V)
Conditional Rated Short Circuit Current		50kA (400V)	100kA (500V)
Terminal Capacity		1x 0.75 - 25mm^2 2x 0.75 -10mm^2	1x 4 - 50mm^2

DIMENSIONS

LTL000-1/9

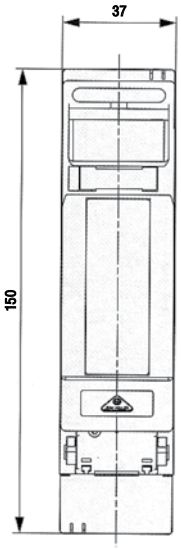

LTL00-1/9

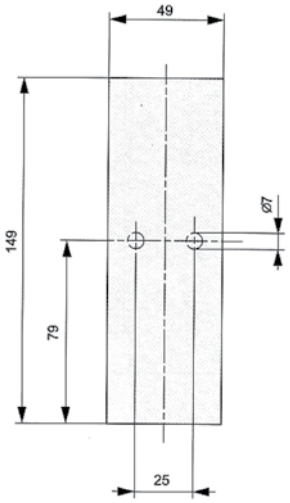

Befestigungsmasse

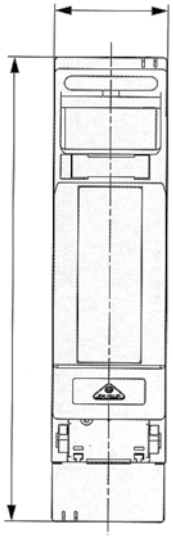

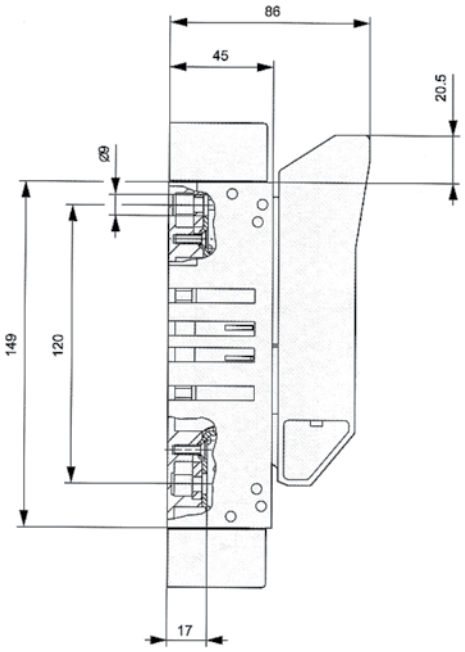

LTL4a-1/1250/9
LTL4a-1/1600/9

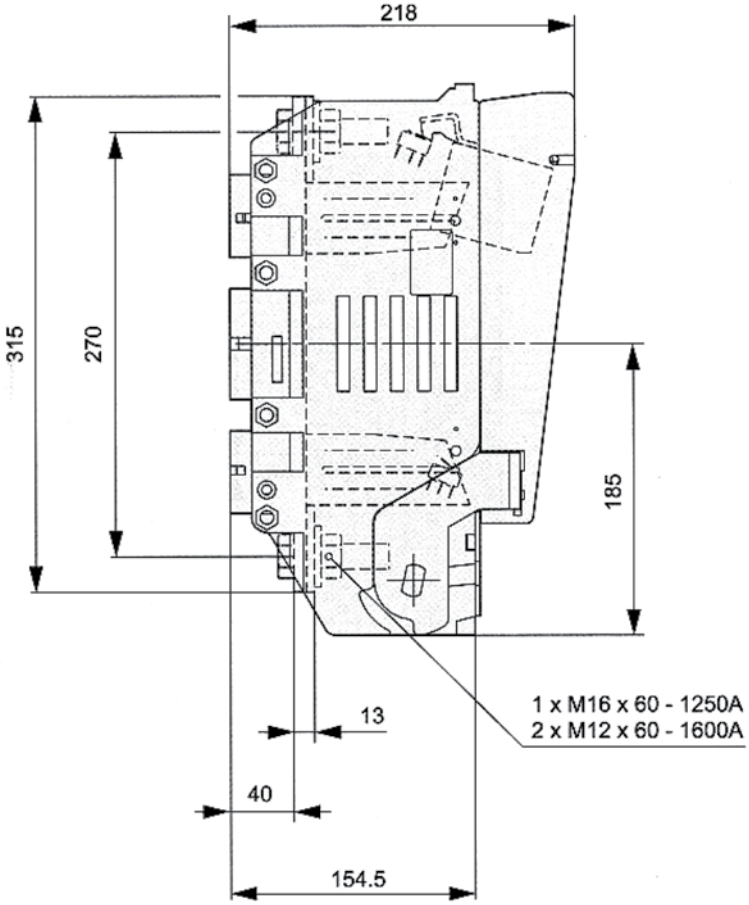

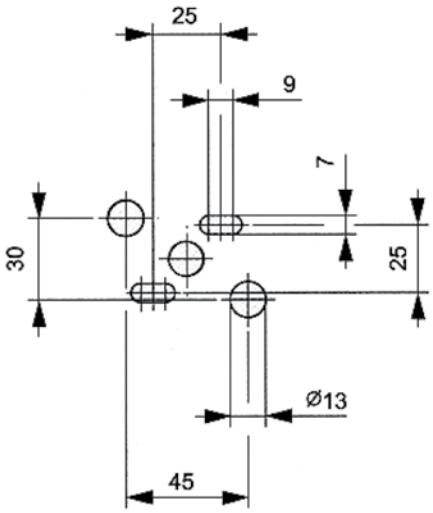

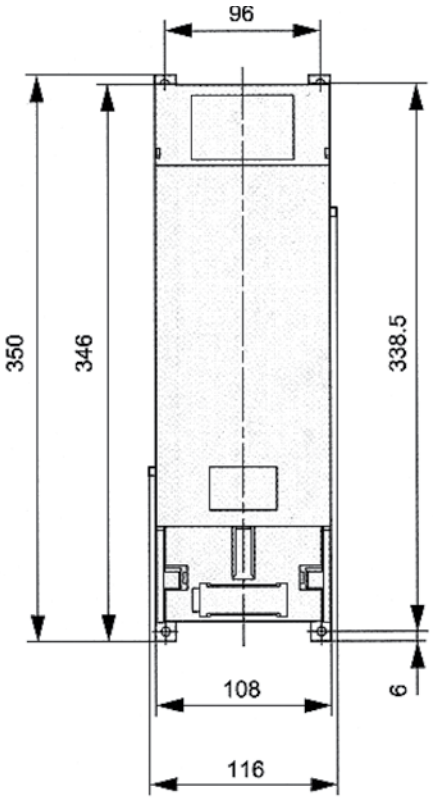

LTL00-3/9
LTL1-3/9
LTL2-3/9
LTL3-3/9

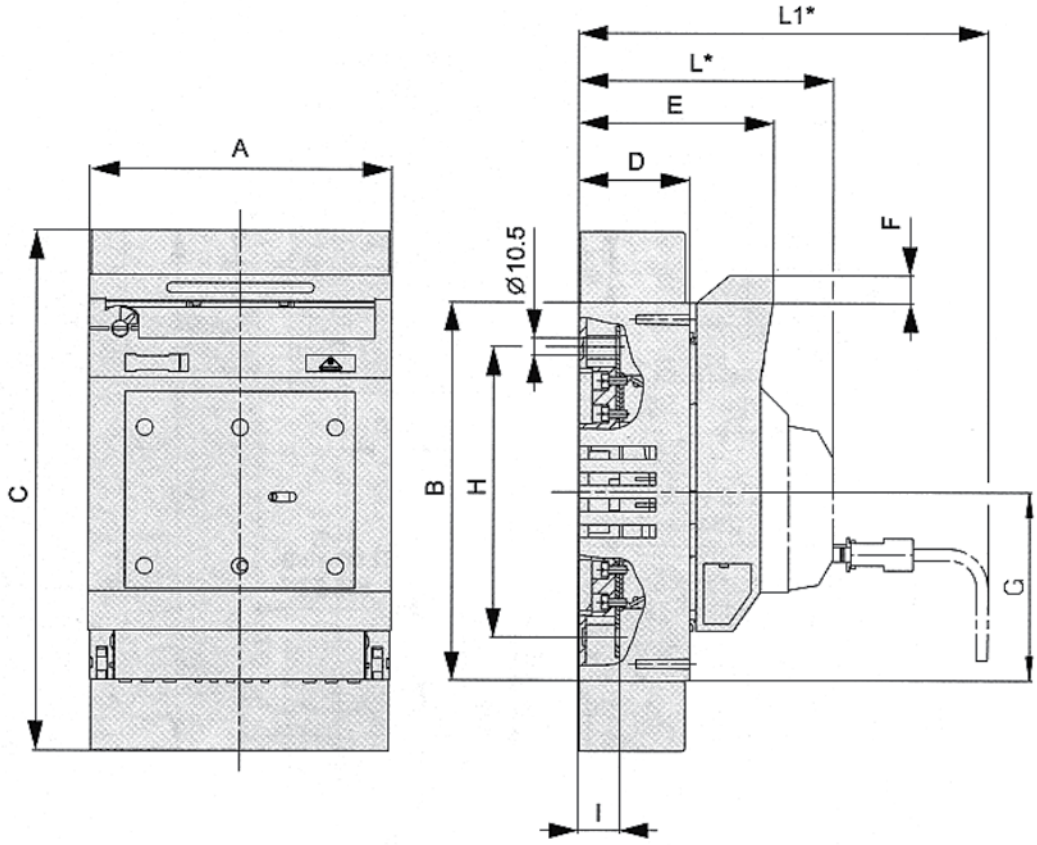

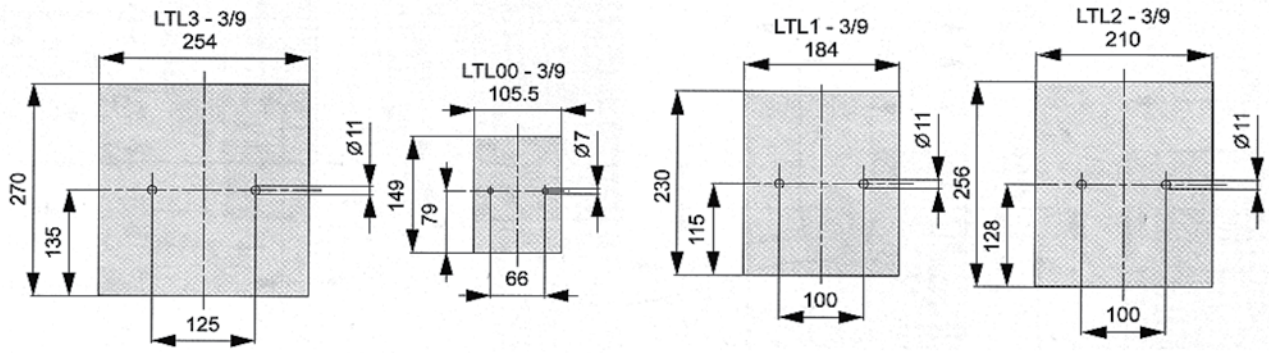

	A	B	C	D	E	F	G	H	I
LTL000-3/9	89	139	150	48	78.5	0	70	112	15
LTL00-3/9	105.5	149	200	45	86	20.5	74.5	120	17
LTL1-3/9	184	230	317	68	119	16.5	115	177	25
LTL2-3/9	210	256	397	81	133	16.5	128	205	25
LTL3-3/9	254	270	430	96	147	9	135	220.5	30.5

LTL4A-3X3/1250/9
LTL4A-3X3/1600/9

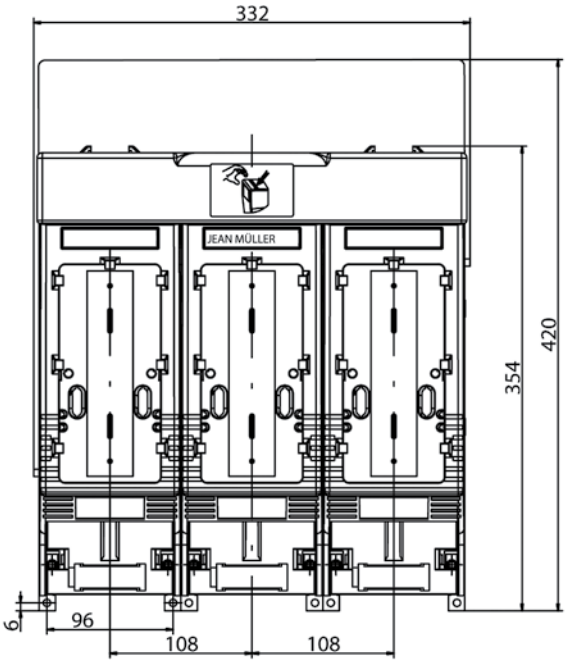

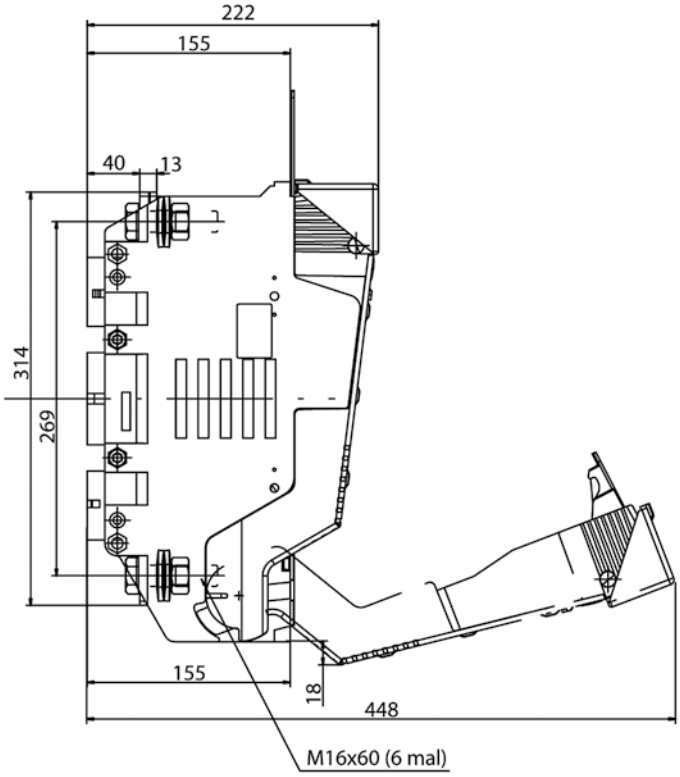

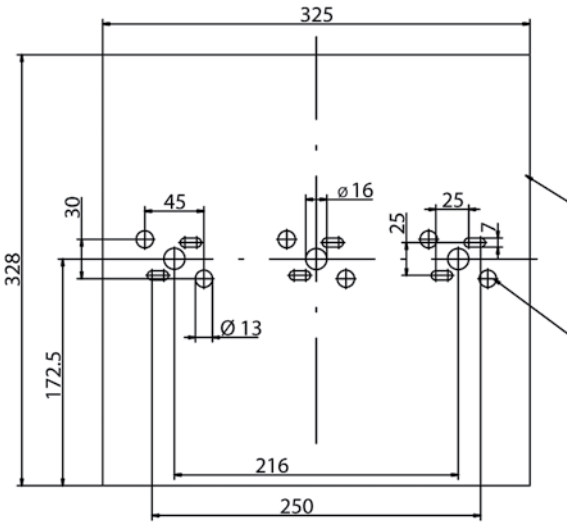

LTL000-3/9/60/F57/F5

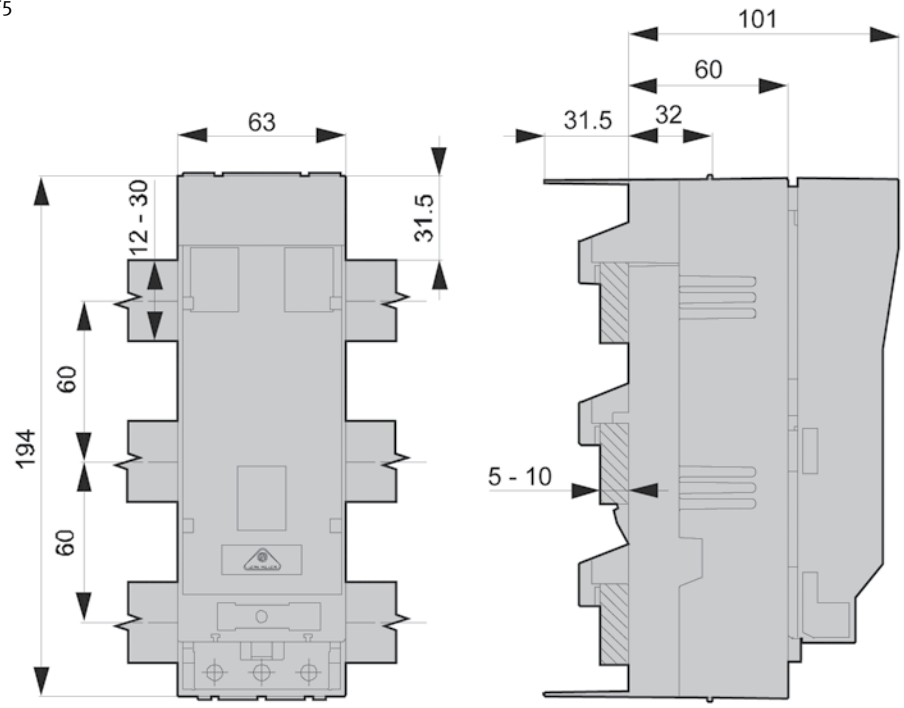

Comb busbars

FTG comb type busbars are constructed of three copper conductors within a single moulding for connection to Jean Müller LTL000-3/9* or LTL00-3/9* horizontal fuse disconnects.

The busbar is rated at 250amps.

Removable end caps allow the busbar to be shortened to intermediate sizes if required.

	Description		Part No.
	Busbar for LTL000-3/9 100A disconnects		
	For connection to 3 disconnects*		FTG-LTL000-3
	For connection to 5 disconnects*		FTG-LTL000-5
	*(Bottom Feed Only)		
	Busbar for LTL00-3/9 160A disconnects		
	For connection to 3 disconnects		FTG-LTL00-3
	For connection to 5 disconnects		FTG-LTL00-5
	*(Top and Bottom Feed)		
	Feed terminal		
	For cables up to 95mm^2 (3x required per disconnect)		FTG-LTL00/F
	Terminal covers		
	To provide finger protection to disconnect terminals fitted with FTG Busbars		
	For LTL00		GO-LTL00-FTG
	For LTL000		Cover not available

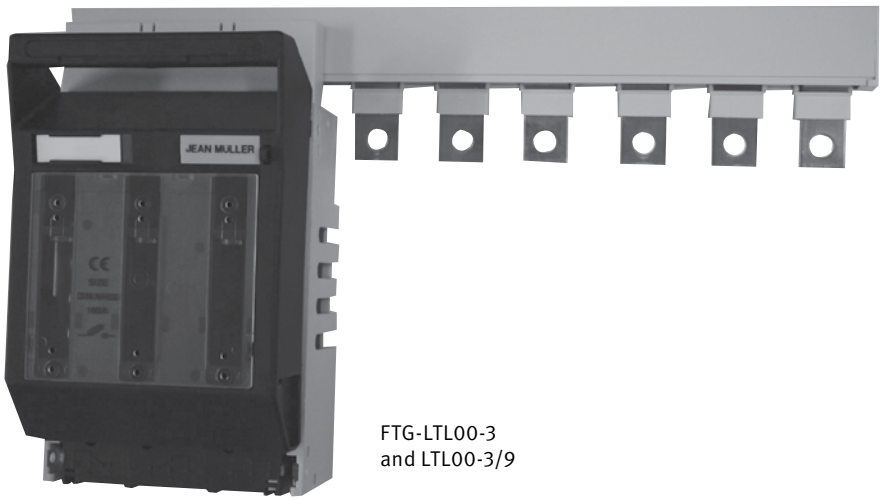

FTG-LTL00-3
and LTL00-3/9

Also available in KETO Range. Refer to page 58

C|O|S|M|O® 60mm busbar-system

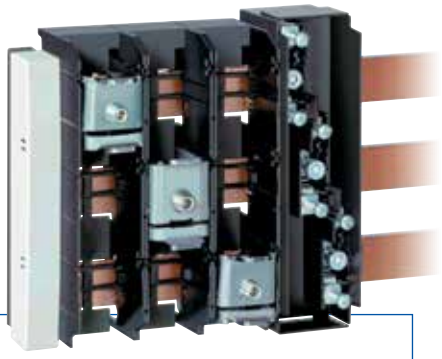

Busbar supports

- Two-piece busbar supports adjustable to different busbar width with means of integrated adjusting element

Busbar cover

- Clip on busbar covers are used for the protection of 3-pole and 4-pole busbar systems
- They are extendable or detachable at anytime. In addition they offer variable covering widths without measuring and cutting

Connection modules

- Connection modules connect the busbars to power supply and protect against unintentional access to live parts
- Integrated robust clamps establish electrical contact

C|O|S|M|O® system components

Description	Part No.
Busbar support	
3-pole	SST-60/49-3
End cover	
3-pole	A-SST-60/3
Busbar cover	
3-pole	SAD60/3
Connecting modules up to 250A	
3-pole 1,5mm²-70mm²	AM-60/250/3
Connecting modules up to 630A	
3-pole 70mm²-300mm²	AM-60/630/3

DSL-60/183-5

C|O|S|M|O® 60mm busbar system

Load disconnect switches for D-type fuses 63A

For Fuses	Current Rating (A)	Cable Connection	Connection Capacity(mm²)	Connection to Busbars	Part No.
D02	63	Clamp	max. 25	Snap-on	DSL-60/183-5
Screw cap					K02

RS-60/273-5

Fuse bases for D-type fuses -25A

For Fuses	Current Rating (A)	Cable Connection	Connection Capacity(mm²)	Connection to Busbars	Part No.
DII	25	Clamp	max. 25	Snap-on	RS-60/273-5
Front Cover					ARS-273/230
Top or bottom end cover					GOURS273-230
Left or right side cover					ASRS-230
Screw Cap					K2

RS-60/333-5

Fuse bases for D-type fuses -63A

For Fuses	Current Rating (A)	Cable Connection	Connection Capacity(mm²)	Connection to Busbars	Part No.
DIII	63	Clamp		Snap-on	RS-60/333-5
Front Cover					ARS-333/230
Top or bottom end cover					GOURS333-230
Left or right side cover					ASRS-230
Screw Cap					K3

D - Type fuse bases

- Rated Current: 25A and 63A
- Rated Voltage: 25A - 500V, 63A - 690V
- Standard: IEC269-3-1
- Flame Resistance to: UL94V-ø
- Terminal: Clamp Type, self lifting, 25mm^2 max.
- Touch Protection: Clip-on Covers for top, bottom and sides are available.
- Mounting: On Busbars 12-30mm width, 5 or 10mm thick.

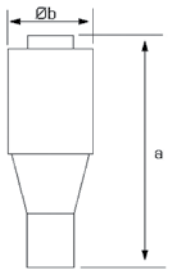

DIN size	Thread	Amps	a	Øb
D11	E27	10-25	50	21.8
D111	E33	35-63	50	28

D -Type fuse bases

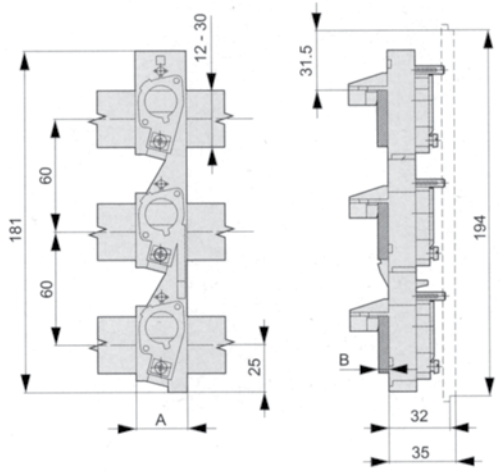

	A	A
RS60/273-5	45	45
RS60/333-5	54	5

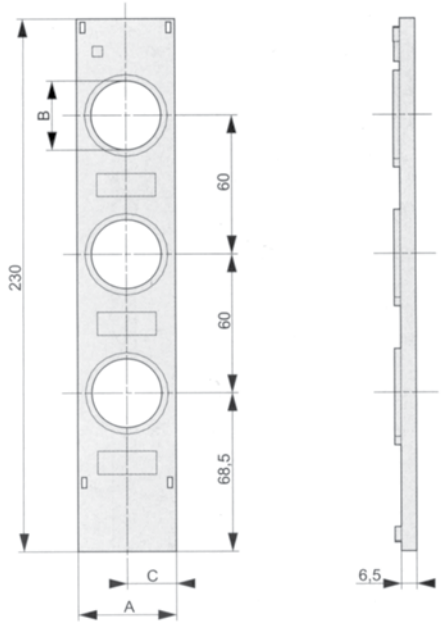

	A	B	C
ARS273/230	45	30	22.5
ARS333/230	54	36	27

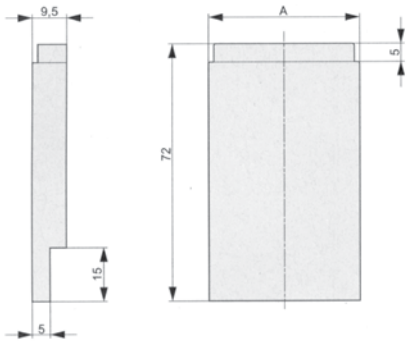

	A
GOURS273-60	42
GOURS333-60	57

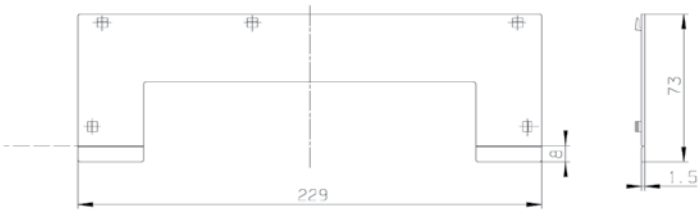

ASRS-60

100mm busbar system

WH-BSC/3P

100mm busbar system components

Description			Part No.
3-pole busbar support			WH-BSC/3P
Support end cover			WH-BSEC
Busbar hole inserts			
	M8 thread	14mm bar hole	Sl-BHI/M8
	M10 thread	14mm bar hole	Sl-BHI/M10
	M12 thread	14mm bar hole	Sl-BHI/M12
	M16 thread	18mm bar hole	Sl-BHI/M16

SL00-3X3/100/F/HA

Vertical fuse disconnects 100mm busbar mount - 3 pole individual pole switching

Size	For Fuses	Current Rating (A)	Switch Width (mm)	Busbar centre spacing (mm)	Part No.
00	DIN000 & DIN 00	160	50	100	SL00-3X/100/F/HA

Vertical fuse disconnects 100mm busbar mount - 3 pole switching in one action

Size	For Fuses	Current Rating (A)	Switch Width (mm)	Busbar centre spacing (mm)	Part No.
00	DIN000 & DIN 00	160	50	100	SL00-3X3/100/F/HA

Note: Refer also to Vertical fuse disconnects (pages 27-43)

185mm busbar system

SH100/185

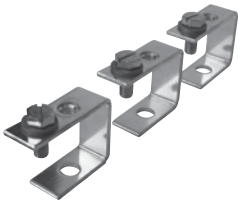

AB-SL00/1

AL-SL00/42

H-SL00/185

H-RF

Description			Part No.
3 pole busbar support			
For busbars at 100mm or 185mm spacing			SH100/185
Busbar hole inserts			
	M8 thread	14mm bar hole	SL-BHI/M8
	M10 thread	14mm bar hole	SL-BHI/M10
	M12 thread	14mm bar hole	SL-BHI/M12
	M16 thread	18mm bar hole	SL-BHI/M16
Adaptor kit (set of 3 pieces)			
To mount 1x SL00-*** with front flush with SL 1,2,3			AB-SL00/1
Adaptor plates			
To mount 2x SL00../185 with fronts flush with SL 1,2,3			AL-SL00/42
Cover 50mm width for spare position on Al-SL00/42			H-SL00/185
Spare position cover			
Clip on cover 100mm width			H-RF
Cover holder			
Set of 4 blocks to mount onto SL00,1,2,3			AH-SL

100mm busbar system

Description	Part No.
Adaptor plates	
To mount 2x SL00../100 with fronts flush with SL 1,2,3	AL185-SL00/100/52
Cover 50mm width for spare position on AL185-SL00/100/52	H-SL00/100

185mm Rack systems

JMTE-BBS3

Jean Müller NZ Ltd assembles complete busbar rack assemblies to customer requirements. The racks listed below are stock types but we can build racks to suit
all requirements.

Rack construction:
- SH100/185 type tested busbar supports
- Plated copper busbars with M12 inserts fitted and stainless steel bolt, spring washer and flat washer attached.
- a 3mm plastic backplate give complete finger protection when disconnects are fitted in all positions.

JMTE-BBS6 front, with 2x JMTE-BAR1 fitted

Description			Part No.
JMTE Rack systems			
700A	50x6mm bar	3 way	JMTE-BBS3
700A	50x6mm bar	4 way	JMTE-BBS4
700A	50x6mm bar	5 way	JMTE-BBS5
700A	50x6mm bar	6 way	JMTE-BBS6
1000A	60x10mm bar	4 way	JMTE-BBS4/1000
1000A	60x10mm bar	6 way	JMTE-BBS6/1000
1000A	60x10mm bar	8 way	JMTE-BBS8/1000
1300A	80x10mm bar	4 way	JMTE-BBS4/1300
1300A	80x10mm bar	6 way	JMTE-BBS6/1300
1300A	80x10mm bar	8 way	JMTE-BBS8/1300

JMTE-BBS6 rear, with 2x JMTE-BAR1 fitted

Mounting straps		
For 6 way racks	30 x 5 x 650mm	JMTE-BAR1
For 6 way racks	50 x 5 x 650mm	JMTE-BAR13

Earth and neutral bars

JMTE-ENBS

Below is a listing of standard earth and neutral bars manufactured by JEAN MÜLLER NZ Ltd.

We also assemble any type and size to customer requirements.
Bars are tin plated copper and fitted with standoff insulators.
Connections shown are the quantity of busbar inserts fitted with screws and washers.

E/N bars

Standard earth and neutral bars

Connections	Bar Size	Current Rating	Part No.
7 x M10 connections 8 x M12 connections	100x6x440mm	1200amp	JMTE-ENBS
6 x M10 connections 8 x M12 connections	50x6x800mm	700amp	JMTE-ENBS2
10 x M12 connections	50x6x810mm	700amp	JMTE-ENBS10

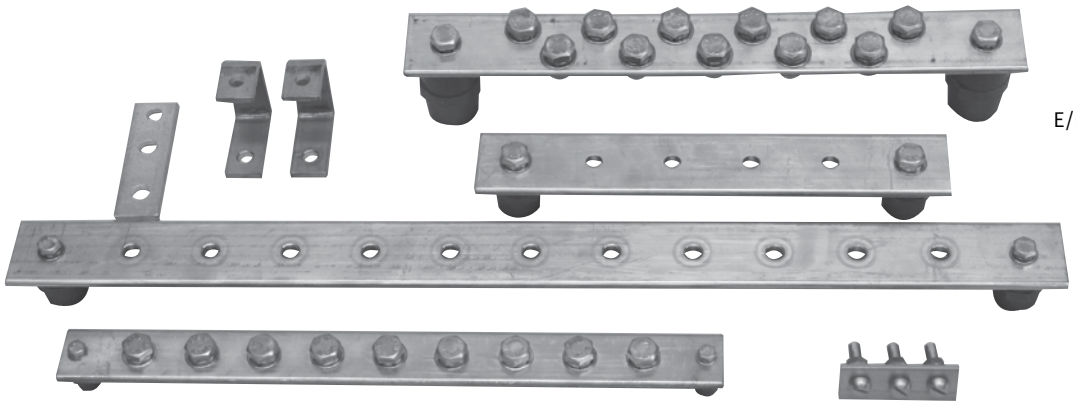

E/N bars made to customer specification

TECHNICAL INFORMATION

Busbar supports	SST-60/3	WH-BSC/3P	SH-100/185
Busbar thickness	5 or 10 mm	10mm	any
Busbar width	20 or 30 mm	30-60mm	20-120mm
Busbar mounting	Clamp on 60mm centres	Clamp on 100mm centres	Bolted into threaded bush M10 on 100mm or 185mm centres
Material		Silicon free, chlorine free	Glass-fibre, reinforced polyester
Temperature withstand		120C	
Short-circuit withstand	See Graph	See Graph	See Graph

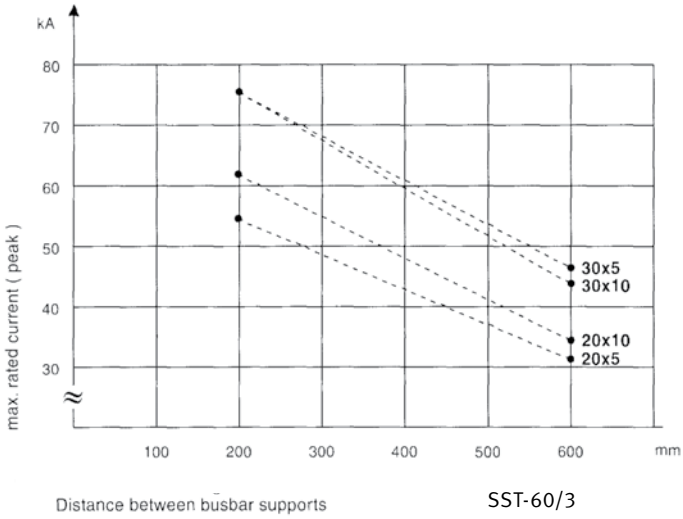

SST-60/3

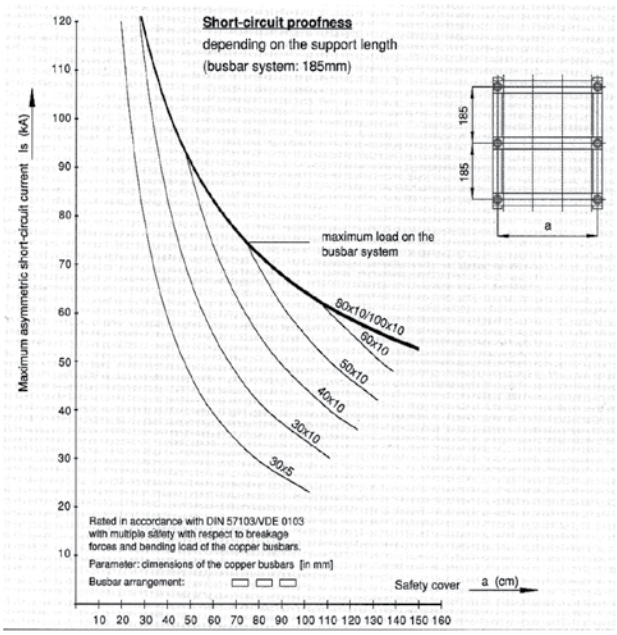

SH-100/185

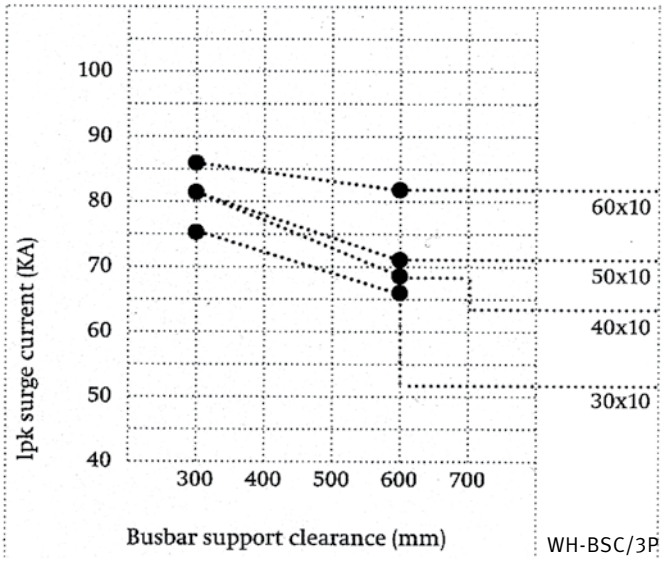

WH-BSC/3P

DIMENSIONS

SST-60/49-3

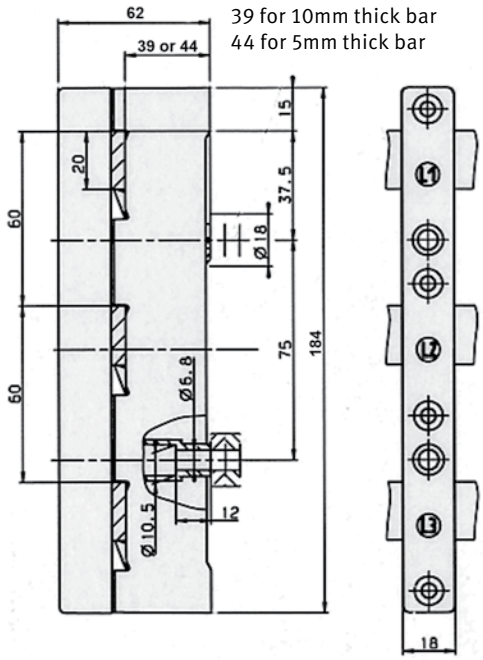

AM-60/250/3

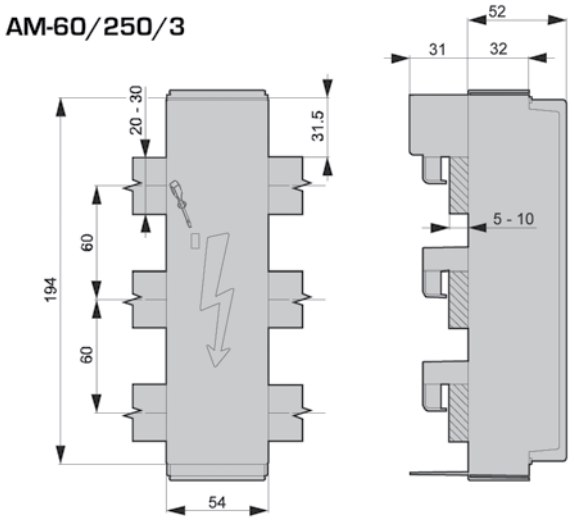

H-RF

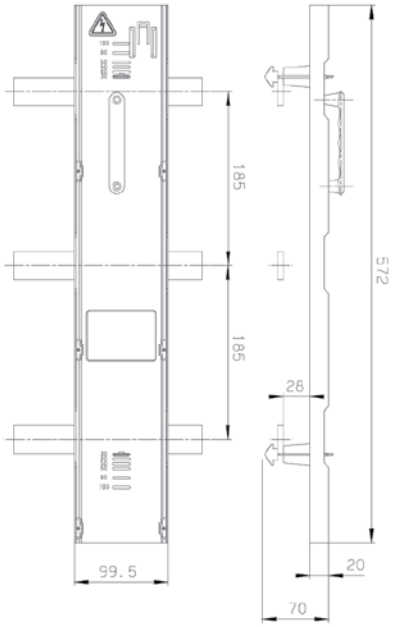

AM-60/630/3

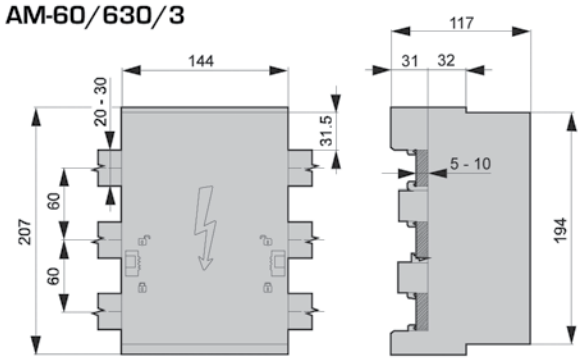

H-SL00/185

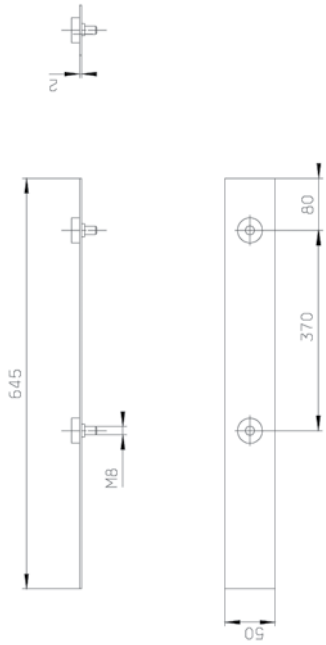

ASST-60/3

WH-BSC/3P

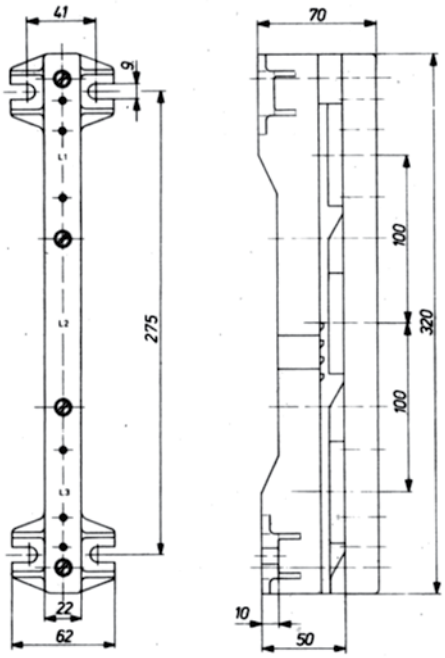

AH-SL

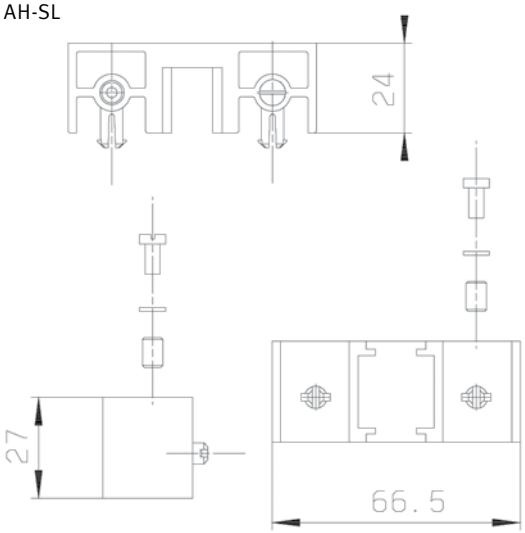

AL-SL00/42

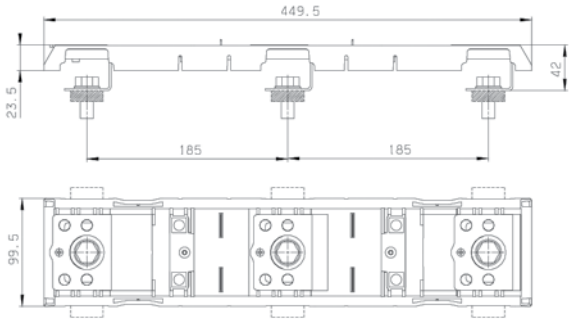

AB-SL00/1

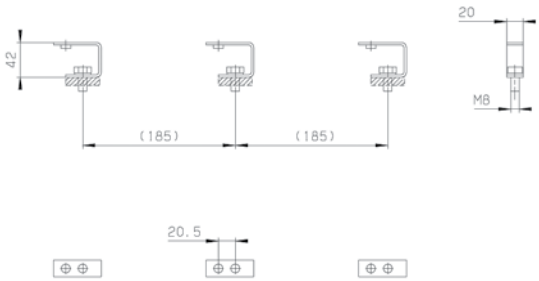

SH-100/185

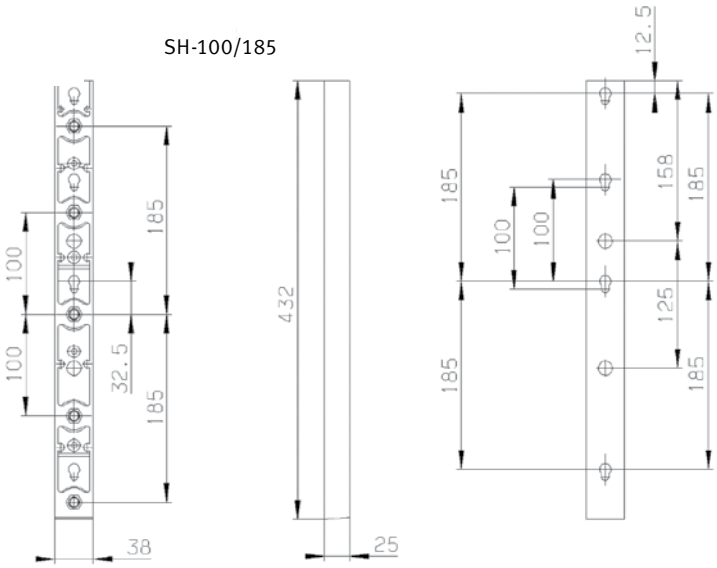

Rack systems

JMTE-BBS3
JMTE-BBS6

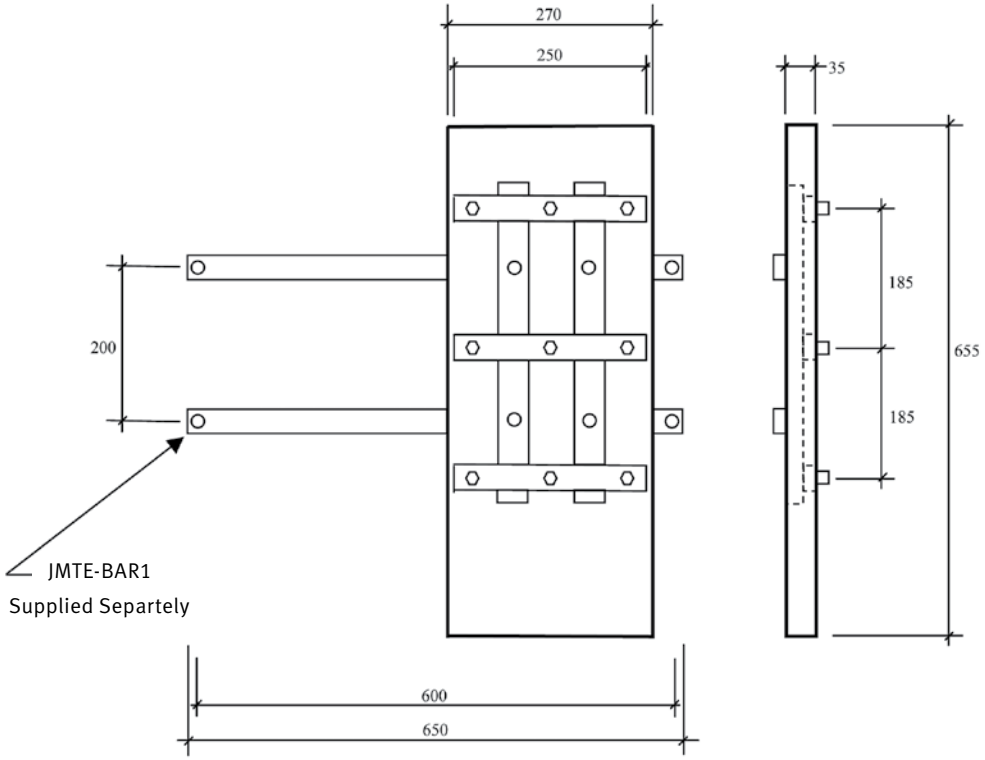

JMTE-BBS6

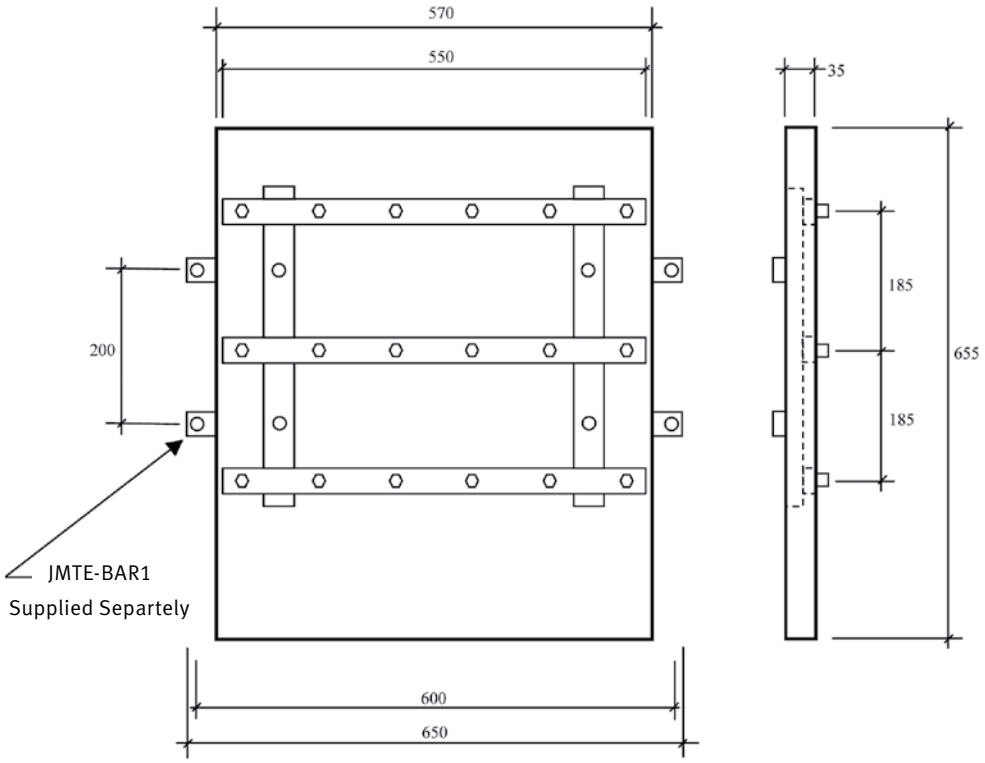

Distribution cabinets series KVS

Range

- 850mm high cabinets
- four widths from 4 way to 10 way
- available in kitset or assembled
- available with busbars up to 1000A

Construction

- constructed from glass-fibre reinforced polyester to DIN14598
- cabinet and base are separate items

Features

- IP44 protection
- three point door locking
- ribbed surface to resist poster adhesion
- door opening 180˚
- grid for additional ground holding available

Distribution cabinets series KVS 850mm height

Cabinet supplied as kitset

		No of ways	Dimensions mm H x W x D	Part No.
		4 way	850 x 462 x 322	KVS00/10SV
		5 way	850 x 596 x 322	KVS0/10SV
		7 way	850 x 791 x 322	KVS1/10SV
		10 way	850 x 1121 x 322	KVS2/10SV

Cabinet supplied assembled

		No of ways	Dimensions mm H x W x D	Part No.
		4 way	850 x 462 x 322	KVS00/10
		5 way	850 x 596 x 322	KVS0/10
		7 way	850 x 791 x 322	KVS1/10
		10 way	850 x 1121 x 322	KVS2/10

Cabinet supplied assembled with 700A busbars (keylock additional)

		No of ways	Dimensions mm H x W x D	Part No.
		4 way	850 x 462 x 322	KVS00/10SAP
		5 way	850 x 596 x 322	KVS0/10SAP
		7 way	850 x 791 x 322	KVS1/10SAP
		10 way	850 x 1121 x 322	KVS2/10SAP

Distribution cabinets series NKVS

Range

- 1100mm high cabinets
- three widths from 4 way to 8 way
- available with busbars up to 1000A

Construction

- constructed from glass-fibre reinforced polyester to DIN14598
- cabinet and base are separate items

Features

- IP44 protection
- three point door locking
- door opening 180˚
- grid for additional ground holding available

Distribution cabinets series NKVS 1100mm height

Cabinet supplied assembled

		No of ways	Dimensions mm H x W x D	Part No.
		4 way	1100 x 596 x 327	NKVS0
		6 way	1100 x 785 x 327	NKVS1
		8 way	1100 x 1115 x 327	NKVS2

Cabinet supplied assembled with 700A busbars (keylock additional)

		No of ways	Dimensions mm H x W x D	Part No.
		4 way	1100 x 596 x 327	NKVS0/SAP
		6 way	1100 x 785 x 327	NKVS1/SAP
		8 way	1100 x 1115 x 327	NKVS2/SAP

Distribution cabinets - bases and accessories

FP0

Bases for KVS and NKVS cabinets in kitset form

For cabinets	Dimensions mm H x W x D	Part No.
KVS00	902 x 460 x 310	FPOO-10/KS
KVS0 & NKVS0	902 x 585 x 310	FPO-10/KS
KVS1 & NKVS1	902 x 780 x 310	FP1-10/KS
KVS2 & NKVS2	902 x 1110 x 310	FP2-10/KS

FP1 with GBPLO

Bases for KVS and NKVS cabinets assembled with 700A E/N bar

For cabinets	Dimensions mm H x W x D	Part No.
KVS00	902 x 460 x 310	FP00-SAN
KVS0 & NKVS0	902 x 585 x 310	FP0-SAN
KVS1 & NKVS1	902 x 780 x 310	FP1-SAN
KVS2 & NKVS2	902 x 1110 x 310	FP2-SAN

FP1 with FPH

Pedestal elevation for flood areas

Description	Size	Part No.
511mm elevation	00	FPH00-10/KS/BV
	0	FPH0-10/KS/BV
	1	FPH1-10/KS/BV
	2	FPH2-10/KS/BV

Accessories

	Part No.
Cylinder key lock for KVS & NKVS cabinets Additional charge for lock keyed to customers requirement (net price)	CKL-UL
Grid baseplate to increase groundholding for 00/0/1	GBPL0
Padlockable handle	SV-PL

Distribution cabinets series EH

Empty cabinets

Model			Dimensions mm H x W x D	Part No.
EHFB			1349 x 425 x 240	EHFB
EHFERB			1622 x 425 x 240	EHFERB

Fitted cabinets (keys invoiced separately, but included in price)

Model	Fitted with	Dimensions mm H x W x D	Part No.
EHFB	- formica panel 400 x 450mm - key lock additional	1349 x 425 x 240	EHFB/PNL
EHFERB	- 700A phase bars - single earth/neutral bar - key lock additional	1622 x 425 x 240	EHFERB/35

Accessories

	Part No.
Cylinder key lock for EH cabinets Additional charge for lock keyed to customers requirement (net price)	CKL-UL
Threaded insert M6	SOC-IT6
500ml paint kit - any colour	JMTE/PAINT/KIT500
1000ml paint kit - any colour	JMTE/PAINT/KIT1000

Note: Paint kits include - 2k colour, hardener, thinner, mixing bowl, roller with sleeve & data sheet.

EHFB

EHFERB

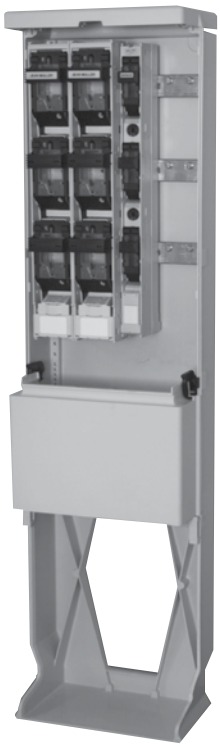

EHFERB/35 with disconnects fitted

DIMENSIONS

EHFB

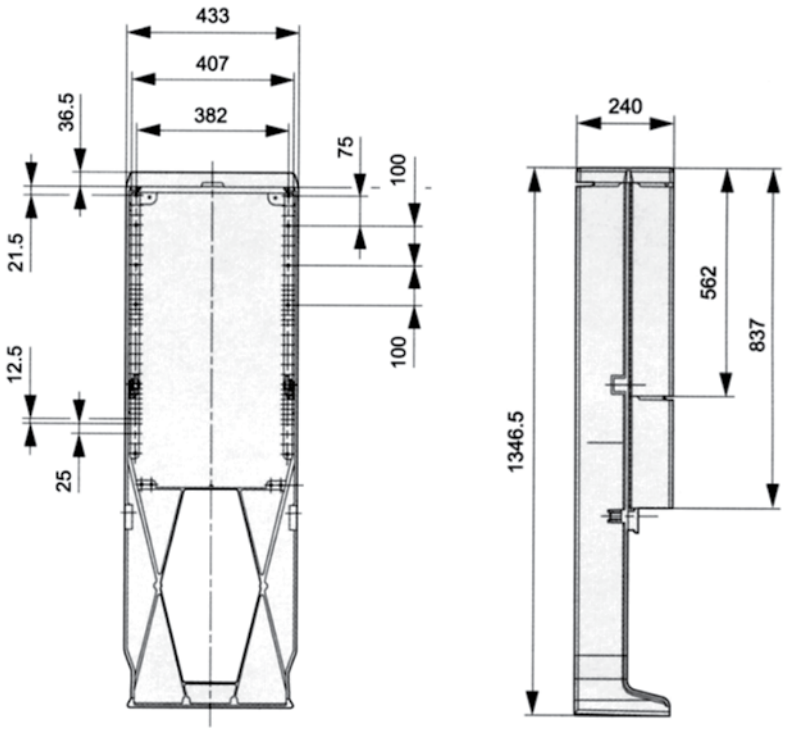

EHFERB

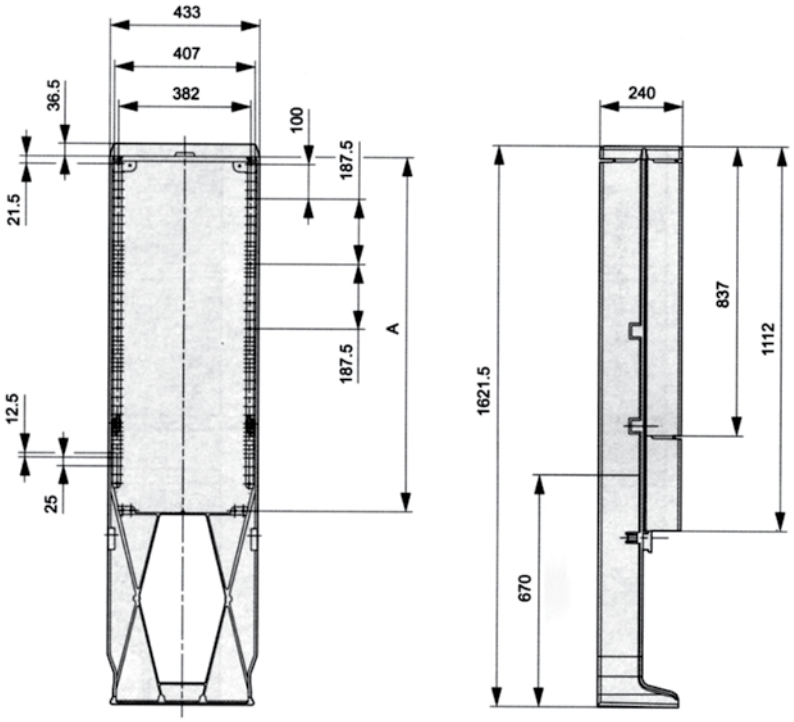

EHFERB

KVS00/10

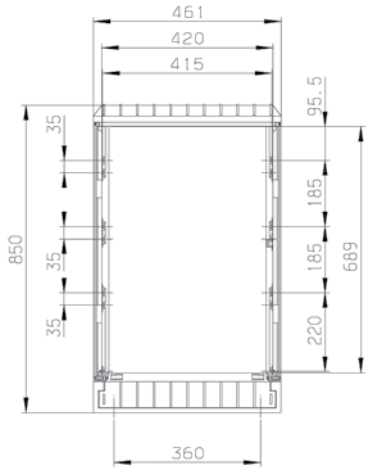

KVS1/10

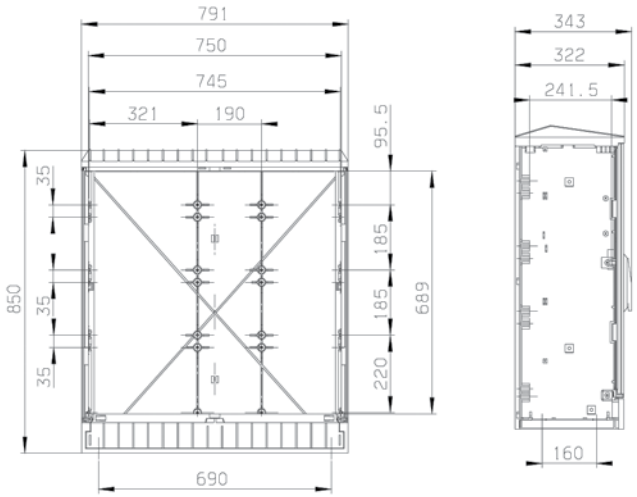

KVS0/10

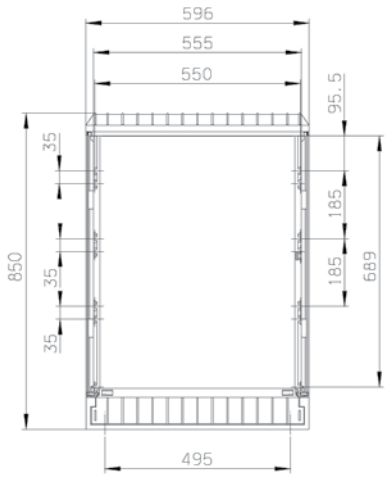

KVS2/10

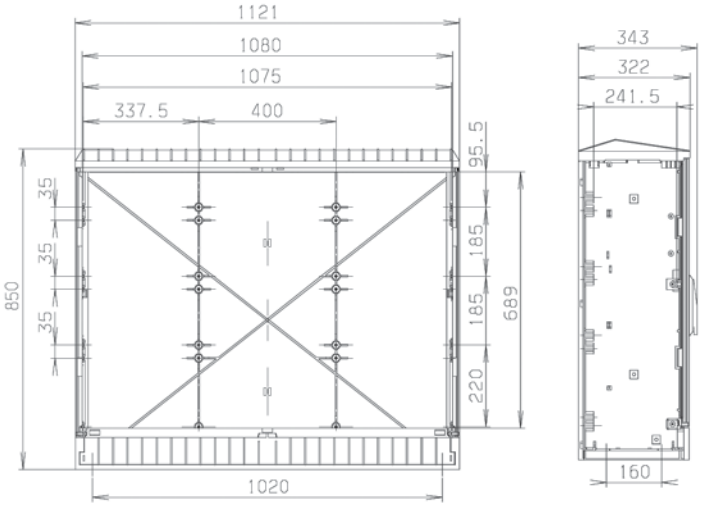

NKVS0

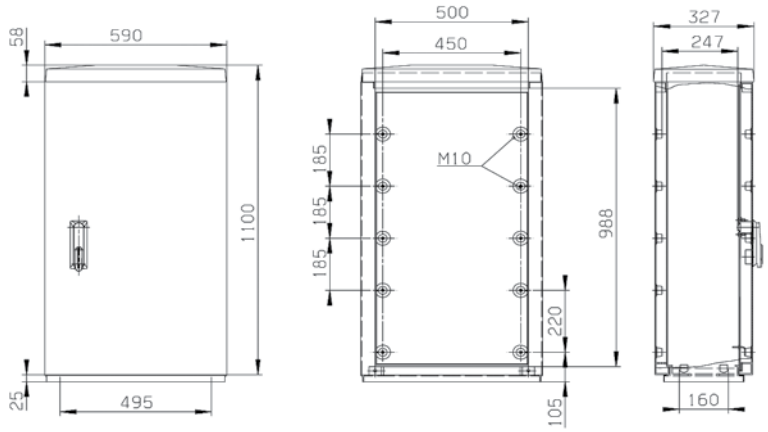

NKVS1

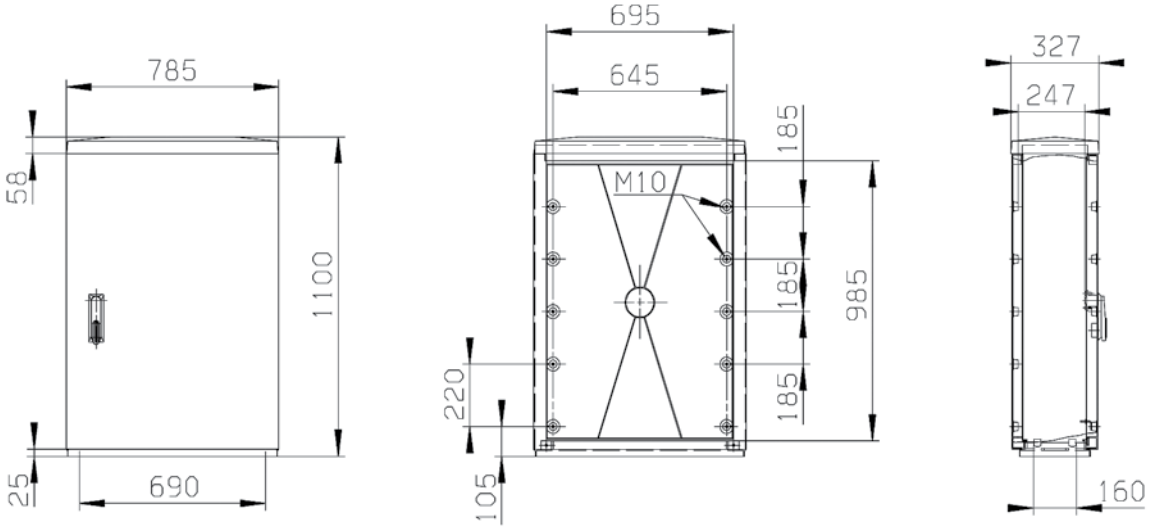

NKVS2

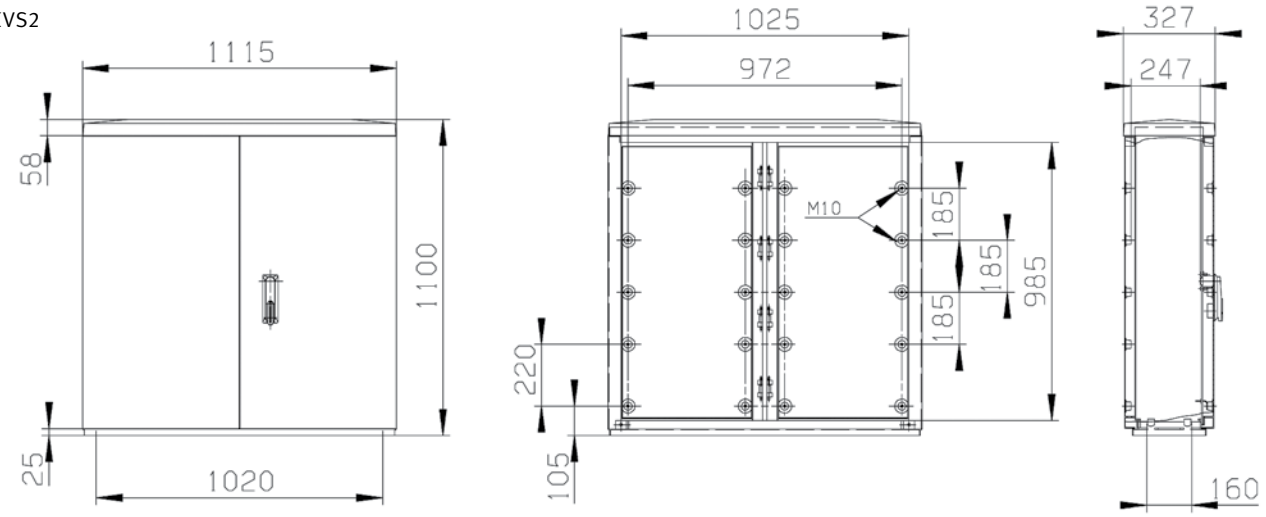

FP00
FP0
FP1
FP2

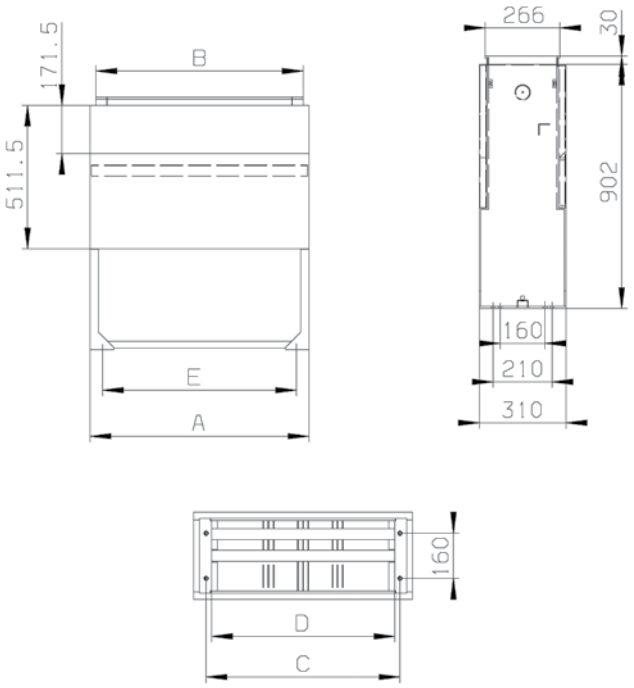

	A	B	C	D	E
FP00	450	408	360	322	360
FP0	585	543	495	457	495
FP1	780	738	690	652	690
FP2	1110	1068	1020	982	1020

FPH00
FPH0
FPH1
FPH2

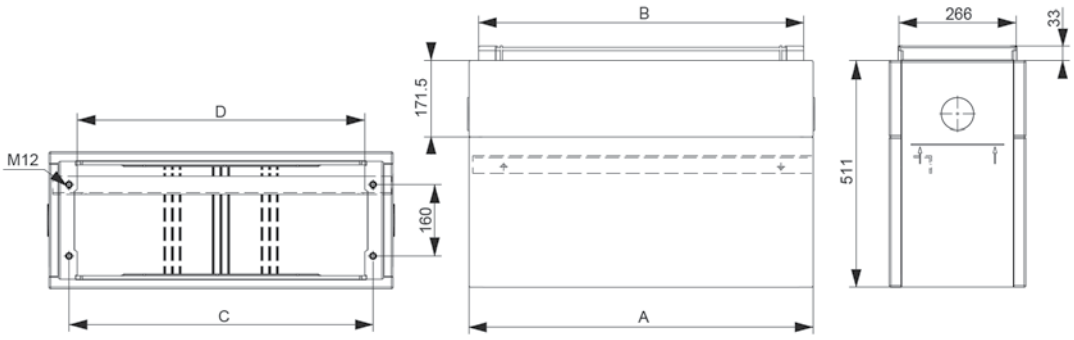

Size	A	B	C	D
FPH00	450	408	360	322
FPH0	585	543	495	457
FPH1	780	738	690	652
FPH2	1110	1068	1020	982

Universal measuring devices

UMG96L

	Part No.
3 phase display indicating: - voltage, L-L, L-N, max values, min values - current L1, L2, L3, N, average, max, MDI - frequency and power factor - real power, W per phase, sum & max - apparent power, VA per phase, sum & max - reactive power, VAR per phase, sum & max - energy kWh total and kVARh total	UMG96L

UMG96RM

	Part No.
3 phase display indicating: - voltage, L-L, L-N, max values, min values - current L1, L2, L3, N, average, max, MDI - frequency and power factor - real power, W per phase, sum & max - apparent power, VA per phase, sum & max - reactive power, VAR per phase, sum & max - energy kWh total and kVARh total - total harmonic distortion - 2x digital outputs - RS485 interface - data memory	UMG96RM

MDI metering - complete solutions

3 Phase metering using UMG 96L meter	Part No.
The following three items are all that is needed to construct a fully metered vertical disconnect. Displayed functions are as shown for the UMG96L on the facing page.	
Vertical disconnect from page 32	SL*-3X*/W/3A
Current transformers from page 32 (3x reqd)	WKD51/1/***-5
UMG96L mounted in an IP65 enclosure Enclosure dimensions 130 x 130 x 100mm A bracket on the enclosure provides easy mounting on the top of the disconnect. The meter is fully wired for connection to the CTs and to the three phase supply and neutral. The phase connections are wired through 5A fuses.	UMG96L/ENCL

ENSTO - Saves your energy

Ensto Underground offers a comprehensive solution for 1-36kV cable networks.

The products have been developed to endure the most varying and demanding conditions and both their mechanical and electrical properties have been thoroughly type tested. Ensto products exceed the requirements of international and national standards.

The shear bolt connector and cable lug range stocked by JEAN MÜLLER NZ Ltd offer many advantages over other brands available including:

- both LV and MV lugs available
- wider range of LV connectors and lugs
- less tools required
- competitive pricing.

Low voltage cable connectors & lugs 1KV

Shear head bolt connectors with barrier 1kV

ESLJ

Nominal cable size	No. of bolts	Tools required for installation	Part No.
Suitable for solid and stranded, sector and circular shaped cables			
6-50mm²	2	14mm Socket	ESLJ6-50
35-95mm²	2	14mm Socket	ESLJ35-95
95-240mm²	4	21mm Socket	ESLJ95-240
150-300mm²	4	21mm Socket	ESLJ150-300

Fillers

SLJT*

Nominal cable size			Part No.
Used with ESLJ connectors when the cable to be joined is smaller			
16-35mm² for ESLJ35-95			SLJT2
50-70mm² for ESLJ95-240			SLJT3
95-120mm² for ESLJ150-300			SLJT4

Shear head bolt cable lugs 1kV

ESAL

Nominal cable size	No. of bolts	Tools required for installation	Part No.
Suitable for solid and stranded, sector and circular shaped cables			
6-50mm²	2	14mm Socket	ESAL6-50
50-95mm²	2	14mm Socket	ESAL50-95
95-185mm²	2	21mm Socket	ESAL95-185
150-300mm²	2	24mm Socket	ESAL150-300

Medium voltage cable connectors & lugs 36kV

ESMJ

Shear head bolt connectors with barrier 36kV

Nominal cable size	No. of bolts	Tools required for installation	Part No.
Suitable for solid and stranded, sector and circular shaped cables			
10-95mm²	2	17mm Socket	ESMJ10-95
70-240mm²	4	24mm Socket	ESMJ70-240
120-300mm²	6	24mm Socket	ESMJ120-300
185-400mm²	6	22mm Socket	ESMJ185-400
400-630mm²	6	24mm Socket	ESMJ400-630

ESML

Shear head bolt cable lugs 36kV

Nominal cable size	No. of bolts	Tools required for installation	Part No.
With 13mm palm hole			
10-95mm²	2	17mm Socket	ESML10-95
70-240mm²	2	24mm Socket	ESML70-240
120-300mm²	2	28mm Socket	ESML120-300
185-400mm²	3	22mm Socket	ESML185-400
400-630mm²	3	22mm Socket	ESML400-630

KE69, KE64, KE63

Clampo Pro Bi-Metalic Terminals

Nominal cable size	Screw size	No. of poles & colour	Part No.
Suitable for copper and aluminium cables			
16-95mm²	5mm Allen Key	1 pole, grey	KE62
35-150mm²	8mm Allen Key	1 pole, grey	KE63
35-240mm²	8mm Allen Key	1 pole, grey	KE64
35-240mm²	8mm Allen Key	2 pole, grey	KE69

Terminal shrouds

			Part No.
Terminal shroud for KE62			KEL62
Terminal shroud for KE63			KEL63
Terminal shroud for KE62			KEL64

Current transformers class 1

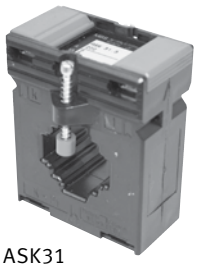

ASK31

ASK51

ASK101

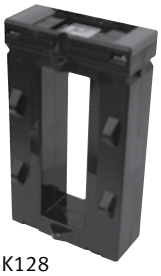

ASK128

Max size of primary conductor (mm)		Primary current	Secondary current (A)	VA	Part No.
Bar	Cable Dia				
Foot or busbar mount Class 1 accuracy					
30 x 10mm	26mm	200A	5A	5VA	ASK31.3/200/5
30 x 10mm	26mm	400A	5A	5VA	ASK31.3/400/5
30 x 10mm	26mm	600A	5A	5VA	ASK31.3/600/5
50 x 12mm	44mm	800A	5A	10VA	ASK51.4/800/5
50 x 12mm	44mm	1000A	5A	10VA	ASK51.4/1000/5
50 x 12mm	44mm	1200A	5A	10VA	ASK51.4/1200/5
100 x 10mm	70mm	600A	5A	10VA	ASK101.4/600/5
100 x 10mm	70mm	800A	5A	10VA	ASK101.4/800/5
100 x 10mm	70mm	1000A	5A	10VA	ASK101.4/1000/5
100 x 10mm	70mm	1200A	5A	10VA	ASK101.4/1200/5
100 x 10mm	70mm	1500A	5A	10VA	ASK101.4/1500/5
128 x 38mm	-	1000A	5A	10VA	ASK128.4/1000/5
128 x 38mm	-	1200A	5A	10VA	ASK128.4/1200/5
128 x 38mm	-	1500A	5A	15VA	ASK128.4/1500/5
128 x 38mm	-	2000A	5A	15VA	ASK128.4/2000/5
128 x 38mm	-	2500A	5A	15VA	ASK128.4/2500/5

Standoff insulators

Stand off height (mm)	Fixing thread	Part No.
Colour - red		
25	M6	DB25/PM6
34	M8	DB34/PM8
34	M10	DB34/PM10
50	M10	DB50/PM10
50	M12	DB50/PM12
65	M10	DB65/PM10
65	M12	DB65/PM12

Power distribution blocks

Incoming cables		Outgoing cables		Part No.
Qty	Size (mm²)	Qty	Size (mm²)	
A space saving and cost saving alternative to DIN-Rail mount terminals. Panel or DIN-Rail mounting IP20 finger proof terminals Plated brass block accepts aluminium or copper cables				
3	2.5 - 16	4	2.5 - 6	FTG-1/080
1	10 - 35	6	2.5 - 16	FTG-1/125
1	6 - 16			
1	35 - 120	5	2.5 - 16	FTG-1/250
		4	2.5 - 10	
		2	6- 35	

PDB-500

Compact Power Distribution Block
1x Cu/Al input 500mm² max
2x Cu/Al outputs 300mm² max

Power distribution block 500mm² - 2x300mm² Cross section

	Cu/Al		Rated torque (Nm)	Part No.
	Round solid (mm²)	Round stranded (mm²)		
Input	95-500	95-500	30-60	PDB 500
Output (x2)	50-300	50-300	25-35	

Sector shaped Al-conductors 90mm²-300mm² have to be pre-rounded with a crimping-tool.

MiniClic System

FTG

Busbar mount and connection

MC22001

Connection	No. of outputs	Current rating total & per output	Part No.
Busbar	10	250/50A	MC22001

Panel mount with incoming terminal

Connection	No. of outputs	Current rating total & per output	Part No.
25-120mm²	10	250/50A	MC22002
25-120mm²	50	250/50A	MC120021

MC00001

MiniClic cube

Connection	No. of outputs	Current rating total & per output	Part No.
1.5-10mm²	Grey	50A	MC00001
1.5-10mm²	Blue	50A	MC00001N
1.5-10mm²	Green	50A	MC00001PE
1.5-10mm²	Red	50A	MC00001R

TECHNICAL INFORMATION

Current transformers

Type	ASK**
Standards	VDO 414 Part 1; DIN42600; VBG4; IEC60044-1
Construction	
Case	Ultrasonically welded Polycarbonate
Flammability	Self-extinguishing to UL94Vo
Terminals	Nickel Plated Brass
Environment	For dry indoor use.
Temperature	-5 C to +40 C
Ratings	
Voltage maximum	0.72 kV
Frequency	50/60Hz
Nominal Thermal Short Time Current	60 x In
Insulation	Class E
Supply	
Foot Mountings	2
Bar Mount Screws	2 (12 with ASK128)

Standoff insulators

Type		DB25	DB34	DB50	DB65
Operating Temperature		-40 C to +130 C			
Flammability		to UL94VO			
AC Internal Flashover Voltage	kV	20	30	40	40
AC Surface Flashover Voltage	kV	7	10	12	15
Twisting Stress	DN X m	3	5	6	6
Compressive Stress	DN	2100	6500	6800	8300
Cantilever Stress	DN	180	450	450	700
Tensile Stress	DN	300	800	850	1500

Power distribution blocks

			FTG-1/080	FTG-1/125	FTG-1/250
Operational Voltage		VAC	600	600	600
Current Rating Cu/Al		A	85 / 66	130 / 103	300 /260
Short Cct Peak - Ipk		kA	2.7	30	51
Short Cct 1 second - Icw		kA	1.9	4.4	21
Input connections	Qty / Size		1x 2.5-16mm²	1x 10-35mm²	1x 35-120mm²
	Tool		Pozi or flat screwdriver	4mm Allen Key	6mm AllenKey
	Torque	Nm	1.5	3.5	19
Output connections without ferrules	Qty / Size		2x 2.5-16mm² 4x 2.5-6mm²	1x 6-16mm² 6x 2.5-16mm²	4x 2.5-10mm² 5x 2.5-16mm² 2x 6-35mm²
	Tool		Pozi or flat screwdriver	Pozi or flat screwdriver	Flat screwdriver
	Torque	Nm	1.5 / 0.8	3.5 / 2.0	18 / 18 / 31
Mounting			DIN-Rail or base mounting with 2x M5 screws		
Protection			IP20	IP20	IP20
Dimensions (LxWxH) mm			66 x 27 x 47	74 x 27 x 47	96 x 45 x 49

Power distribution block 500mm² - 2x300mm²
Technical data

Material		
Clamping body	Aluminium	Plated
Housing	PA66-VO	Grey RAL 7035
Screw	Steel	Nickle plated
General data		
Heat deflection temperature		130˚C - UL94-VO
CTI value of isolation		600
Regulations		IEC 60947-7-1
Electrical data		
Nominal operating current		950A
Nominal voltage		AC 1000V/DC1500V

Cross section	Cu/Al		Rated torque (Nm)
	Round solid (mm²)	Round stranded (mm²)	
Input	95-500	95-500	30-60
Output (x2)	50-300	50-300	25-35

Sector shaped Al-conductors 90mm²-300mm² have to be pre-rounded with a crimping-tool.
Article numbers on request.

IP rating

Degrees of protection provided by enclosures (IP-Code) according to IEC/EN 60529:2000-09 (extract)

1st digit	Protection against contact	Protection against ingress of objects	2nd digit	Protection against harmful ingress of water
0	No protection	No protection	0	No protection
1	Protected against access to dangerous parts with the back of the hand	Protected against solid foreign object size ›50mm	1	Protected against dripping water
2	Protected against access to dangerous parts with a finger	Protected against solid foreign object size ›12.5mm	2	Protected against dripping water when tilted up to 15°
3	Protected against access to dangerous parts with a tool	Protected against solid foreign object size ›2.5mm	3	Protected against spraying water
4	Protected against access to dangerous parts with a wire	Protected against solid foreign object size ›1mm	4	Protected against splashing water
5	Protected against access to dangerous parts with a wire	Protected against dust	5	Protected against water jets
6	Protected against access to dangerous parts with a wire	Dust tight	6	Protected against powerful water jets
-	-	-	7	Protected against temporary immersion in water
-	-	-	8	Protected against continuous immersion in water

Utilization categories for fuse combination units in accordance with IEC/EN 60947-3:2010-02, VDE 0660 Part 107

AC

Utilization category	Typical applications	Verification of electrical endurance							Verification of making and breaking capacities						
		Make				Break			Make				Break		
		I_e A	I/I_e	U/U_e	cos Φ	I_c/I_e	U_r/U_e	cos Φ	I_e A	I/I_e	U/U_e	cos Φ	I_c/I_e	U_r/U_e	cos Φ
AC-20A(B) [1]	Connecting and disconnecting under no-load conditions	[3]	[2]	[2]	[2]	[2]	[2]	[2]	[3]	[2]	1.05	[2]	[2]	1.05	[2]
AC-21A(B) [1]	Switching of resistive loads, including slight overloads	[3]	1	1	0.95	1	1	0.95	[3]	1.5	1.05	0.95	1.5	1.05	0.95
AC-22A(B) [1]	Switching of mixed resistive and inductive loads, including slight overloads	[3]	1	1	0.8	1	1	0.8	[3]	3	1.05	0.65	3	1.05	0.65
AC-23A(B) [1]	Switching of motor loads and other highly inductive loads	[3]	1	1	0.65	1	1	0.65	[4]	10	1.05	0.45	8	1.05	0.45
									[5]	10	1.05	0.35	8	1.05	0.35

DC

Utilization category	Typical applications	Verification of electrical endurance							Verification of making and breaking capacities						
		Make				Break			Make				Break		
		I_e A	I/I_e	U/U_e	L/R ms	I_c/I_e	U_r/U_e	L/R ms	I_e A	I/I_e	U/U_e	L/R ms	I_c/I_e	U_r/U_e	L/R ms
DC-20A(B) [1]	Connecting and disconnecting under no-load conditions	[3]	[2]	[2]	[2]	[2]	[2]	[2]	[3]	[2]	1.05	[2]	[2]	1.05	[2]
DC-21A(B) [1]	Switching of resistive loads, including slight overloads	[3]	1	1	1	1	1	1	[3]	1.5	1.05	1	1.5	1.05	1
DC-22A(B) [1]	Switching of mixed resistive and inductive loads, including overloads (e.g. shunt motors)	[3]	1	1	2	1	1	2	[3]	4	1.05	2.5	4	1.05	2.5
DC-23A(B) [1]	Switching of highly inductive loads (e.g. series motors)	[3]	1	1	0.75	1	1	0.75	[3]	4	1.05	15	4	1.05	15

I Making current
I_c Breaking current
I_e Rated operational current
U Voltage
U_e Rated operational voltage

1) A: Frequent actuation, B: Occasional actuation
2) If the switching device has a making and/or breaking capacity, the values for the current and the power factor (time constants) must be stated by the manufacturer.
3) All values
4) $I_e \leq 100A$
5) $I_e > 100A$

DIMENSIONS

ASK31.3

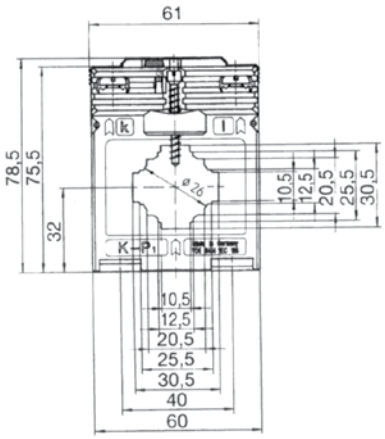

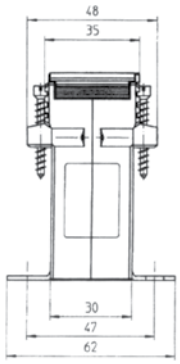

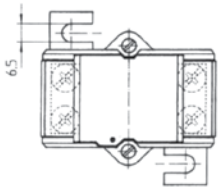

ASK101.4

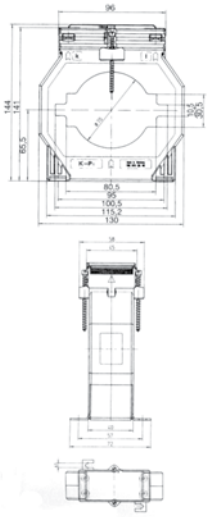

ASK51.4

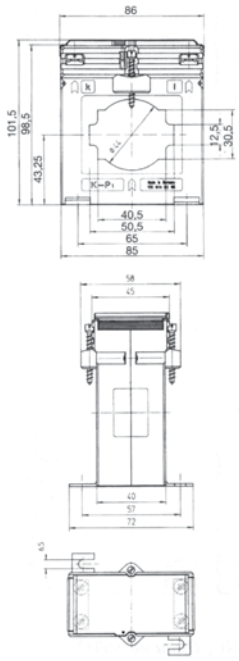

ASK128.4

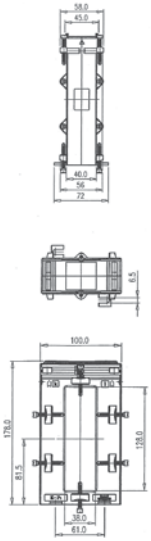

DB Standoff Insulators

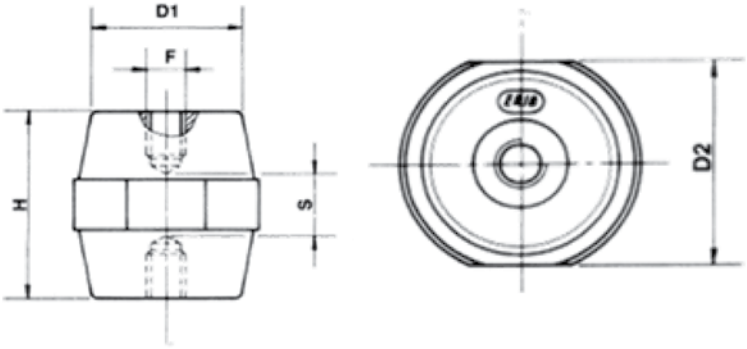

	F	H	D1	D2	S
DB25	M6	25.2	15	19	9
DB34	M8	35	28	32	10
DB34	M10	35	28	50	10
DB50	M10	51	29	36	20
DB65	M10	63.5	35	41	30

Shear head bolt connectors & lugs

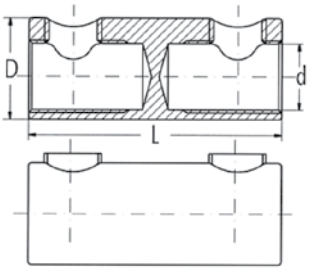

	L	D	d
ESLJ6-50	54	20	11
ESLJ35-95	58	31	20
ESLJ95-240	119	38	26
ESLJ150-300	130	43	29

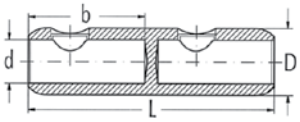

	L	D	d
ESMJ10-95	70	25	14
ESMJ95-240	120	34	20.5

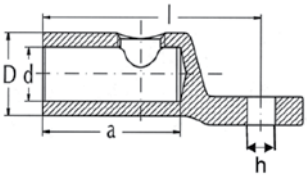

	L	D	d	h	Palm Width
ESAL6-50	50	20	10	10.3	20
ESAL50-95	74	25	15	10.5	25
ESAL95-185	85	30	19	12.5	30
ESAL150-300	114	42	29	12.5	42
ESML10-95	60	26	14	13	26
ESML95-240	103	34	20	17	34

Jean Müller (New Zealand) Limited - Standard Terms of Trade

These terms of trade ("Terms") are incorporated into any contract for the sale of goods and/or services ("Goods and/or Services") between Jean Müller (New Zealand) Limited, company number 3220567 (the "Supplier") and any customer (the "Customer") that places an order for Goods and/or Services with the Supplier ("Order").

These Terms prevail over any other terms and conditions, or any other form of contract, despite any indication to the contrary by any person acting or apparently acting on behalf of the Supplier, unless agreed in writing by a duly authorised officer of the Supplier. The Supplier reserves the right to change these Terms from time to time by giving notice of the amendment to the Customer. Notice is deemed given to the Customer when the Supplier posts the amendment to the Supplier's website, but, for the avoidance of doubt, will not apply to Orders already placed.

2 Orders

All Orders placed by the Customer shall constitute acceptance of these Terms, despite anything to the contrary in an Order. If the Customer does not understand or agree with any of the terms or conditions outlined herein, please contact the Supplier immediately. Receipt by the Supplier of any Order does not conclude a contract. An order will only be deemed accepted by the Supplier, and a contract concluded, upon the earlier of delivery of the Goods and/or Services or the time the Supplier confirms the Order in writing.

Orders can be made accordance with the Supplier's procedures as promulgated from time to time. The Supplier may, at the Suppliers absolute discretion, decline to accept an Order at any time if the Supplier has reasonable cause to do so.

2 Price and payment

The price for the Goods and/or Services will be the price agreed by the Supplier with the Customer at the time of the Order. The Supplier is under no obligation to publish a price list.

Unless otherwise agreed in writing by the Supplier, payment for Goods and/or Services is due on the 20th of the month following the date of the Supplier's invoice to the Customer, receipt of delivery of the Goods and/or completion of the Services (whichever is the earlier) by way of a direct credit to the Supplier's nominated bank account from time to time.

The Customer agrees to pay the Supplier the price for the Order, as well as any applicable taxes, duties (including GST in accordance with the Goods and Services Tax Act 1985) and/or delivery costs (as applicable). Where payment is made by credit card, a surcharge of approximately 3% may be charged. The Supplier reserves the right to request that the Customer pay a deposit for the Order.

The Customer may not withhold payment or make any deductions from any amount owing in respect of the supply of Goods and/or Services from the Supplier without the Supplier's prior written consent. There is no prompt payment discount unless specifically agreed in writing by the Supplier. The Supplier reserves the right to withdraw a Customer's credit facilities at the Supplier's sole discretion at any time.

All payments received will be credited chronologically against invoices which are issued earlier in time regardless of whether the payment is stated to be for a later invoice.

3. Delivery

The Supplier will deliver, or arrange delivery, of the Goods to the location specified in the Order. The Supplier will use the Supplier's best endeavours to fulfil Orders, but the Supplier will not be liable for any failure to deliver, or for a delay in delivery. If the Customer refuses to accept delivery of the Goods and/or Services, the Supplier may charge the Customer for any additional costs incurred as a result, including storage and transportation costs.

The Supplier reserves the right to charge freight costs for despatches under the value of NZ$250.00, or for bulky deliveries such as cabinets and distribution racks. Otherwise, unless specifically agreed to the contrary in writing, the Supplier will absorb the costs of, and incidental to, transportation of Goods having a value above NZ$250.00.

If after 5 Business Days from the date on which the Goods are ready for collection or despatch, delivery is delayed due to the Customer's act, omission, breach or default, the Supplier may at the Supplier's election either store the Goods at the Supplier's premises or elsewhere (and the cost of storage, handling and insurance shall be payable by the Customer on the Supplier's demand), or the Supplier may terminate the Order without liability to the Customer.

Freight cost for deliveries outside of New Zealand must be negotiated between the Supplier and the Customer on a case by case basis.

4. Personal property securities act 1999 (the ppsa)

The Customer grants a security interest to the Supplier in each and every part of the Goods as security for payment of that part and of each other part or parts of the Goods and for any other amounts owing by the Customer to the Supplier from time to time, and for the performance by the Customer of all the Customer's other obligations to the Supplier from time to time, ("Customer's indebtedness and obligations").

For the purposes of section 36(1)(b) of the PPSA, and to ensure maximum benefit and protection for the Supplier by virtue of section 36(1)(b)(iii) of the PPSA, the Customer confirms and agrees that the Customer intends to and does grant to the Supplier, as security for the Customer's indebtedness and obligations, a security interest in all of the Customer's present and after-acquired property except only for any such property which is or comprises items or kinds of personal property which have not been supplied by the Supplier to the Customer, but includes proceeds of any of that present and after-acquired property which has been supplied by the Supplier to the Customer.

The Supplier may allocate amounts received from the Customer in any manner it determines, including in any manner required to preserve any purchase money security interest it has in any Goods.

The Customer waives the right to receive a copy of the verification statement confirming registration of a financing statement or financing change statement relating to the security interest under these Terms.

The Customer agrees that nothing in sections 114(1)(a), 133 and 134 of the PPSA shall apply to these Terms, or the security created under these Terms, and waives the Customer's rights under sections 121, 125, 129, 131 and 132 of the PPSA.

5. Retention of title

The title to Goods delivered remains with the Supplier until payment has been received in full by the Supplier.

6. Risk and ownership

Risk of any loss, damage or deterioration of or to the Goods passes to the Customer on delivery. The Customer is responsible for insuring Goods from the time of delivery. The Customer may not refuse to receive Goods based on minor defects as to quality or insignificant deviations as to quantity. Partial deliveries are also permitted, unless they are unreasonable for the Customer to accept.

Despite any period of credit, Ownership of the Goods remains with the Supplier and does not pass to the Customer until the Customer pays the price of the Goods (and other related sums including any transportation costs and any applicable duties or taxes) to the Supplier ("Customer Debt") or resells the Goods in accordance with these terms provided that the proceeds from any such resale are held in trust in accordance with the provisions set out in this section.

While Ownership of the Goods remains with the Supplier, the Customer must store them separately in a saleable condition as fiduciary, bailee and agent of the Supplier and clearly identify them as belonging to the Supplier; the Customer may (until advised to the contrary in writing by the Supplier), in the ordinary course of its business, use the Goods or sell them for full value, provided that the proceeds from any such resale are held in trust in accordance with the provisions set out in this section and as the Customer's irrevocably appointed agent for the purposes of this clause, the Supplier may, if the Supplier has reasonable grounds to believe that the Customer has not complied with these terms or an "event of default" has occurred or is likely to occur, enter the premises where the goods are stored and remove them.

The Supplier will not be responsible for any damage reasonably caused in entering and removing the Goods. The Customer will indemnify the Supplier for any costs or liability incurred by the Supplier as a result of any such damage. The Customer is liable for all costs of the Supplier (including transportation and storage charges) of and incidental to entering and removing the Goods.

The Supplier may resell any of the Goods and apply the proceeds of sale in reduction of the Customer Debt. If the Customer resells or uses the Goods before ownership of the Goods has passed to the Customer, the proceeds of such sale or use will be held by the Customer (in whatever form) in trust for both the Customer and the Supplier. The Supplier's interest as

beneficiary under that trust is that portion of the proceeds which does not exceed the Customer Debt. The balance of the proceeds (if any) shall be the Customer's beneficial interest under that trust. The Supplier may at any time, by notice in writing, require the Customer to convert the proceeds into money, to be paid into a bank account nominated by the Supplier for disbursement in accordance with these Terms.

7. Warranties

The Supplier warrants that to the Customer that (i) all Goods shall be supplied in good condition at the date of delivery, (ii) all Goods shall be free of defects for a period of 12 months from the date of delivery and (iii) all Services will be performed with due care and attention and in accordance with applicable laws and regulations.

The above warranty does not cover, and the Customer assumes any and all responsibility for, defects, losses and damages arising from or relating to the consequences of natural wear and tear, overloading, fraudulent concealment of the defect, misuse, unauthorised modifications, non-compliance with instructions, negligent handling, accident, intentional damage or any other external influences not assumed under these Terms. Claims based on defects attributable to installation/removal, or repair work, carried out by the Customer or a third party and the consequences thereof are also excluded.

Where any warranty claim is made pursuant to these Terms, the Customer must notify the Supplier of any alleged damage or defect or potential claim as soon as possible, and in any event within 10 business days, once it becomes aware of the same, and, to the extent possible, the Customer must preserve the Goods in the state they were at the time it became aware of such damage, defect or potential claim.

If the claim is then accepted, the Supplier must (at its sole cost and discretion, and within a reasonable time) either repair the Goods, provide a replacement, or provide a credit, provided that the Customer has complied with its obligations under these Terms. The Customer agrees that, to the extent permitted by law, the Supplier' liability to the Customer in respect of damaged or defective Goods is limited to replacement, repair/remedy or credit.

No warranty or condition is implied against the Supplier under any statute, at common law or otherwise, including pursuant to the Sale of Goods Act 1908, and no representation, condition, warranty or variation of these Terms is binding on the Supplier unless it is in writing and signed by a duly authorised officer of the Supplier.

Where the Customer acquires or hold itself out as acquiring Goods from the Supplier for the purposes of a business as defined in the Consumer Guarantees Act 1993 ("CGA"), the provisions of the CGA will not apply.

If the CGA does apply, the Customer has guaranteed legal rights for Goods and/or Services it buys in addition to the above warranty. If the Goods and/or Services supplied to the Customer do not meet a consumer guarantee, but can be remedied within a reasonable time, the Supplier will either repair or replace the relevant Goods and/or Services. The Supplier carries a comprehensive range of spare parts and can remedy most issues. If the Supplier cannot repair or replace the Goods, or those parts of the goods that are at fault, the Supplier will provide the Customer with a refund of the purchase price.

8. Indemnity

The Customer hereby indemnifies and agrees to hold harmless the Supplier (and the Supplier's directors, officers, employees, agents and authorised representatives) against all loss, damage, liability, actions, proceedings, claims, demands or prosecutions, costs, damages and expense of any kind or nature suffered, incurred, brought or commenced against the Supplier (and the Supplier's directors, officers, employees, agents and authorised representatives) as a result of the Customer's fraud, negligence or failure to comply with these Terms.

9. Return of goods

Sale and Return: Goods are not sold on a sale or return basis unless specifically agreed in writing.

Goods Damaged in Transit: Goods damaged in transit must be reported to the Supplier within five business days of their receipt quoting packing slip or invoice number. Where it is identified that damage occurred after risk in the Goods passed to the Customer then the Supplier accepts no responsibility for such claim and will advise the Customer of the appropriate person to claim against.

Mispacked Goods: Short or incorrect Goods must be reported to the Supplier within five business days of their receipt quoting packing slip or invoice number.

Defective Goods: Any Goods which show obvious manufacturing defects must be notified in writing to the Supplier within two business days from receipt of the Goods. Where possible please quote the packing slip or invoice number.

No Credit for Returned Goods: Goods cannot be returned unless the Supplier has specifically agreed with the Customer in writing to this effect in advance and in any event credit will be issued only to the value of the Goods less a re-stocking fee of 10% of the net invoice value.

10. Liability

The Supplier will not be liable for any claim for loss or compensation or any other remedy (of any nature, including under contract or in negligence) by the Customer or any other person, including without limitation any claim relating to or arising from any condition, warranty, description, representation, condition as to fitness or suitability for any purpose, merchantability or otherwise, whether express or implied by law, trade custom or otherwise (excepted as provided by the CGA), or any representation, warranty, or agreement made by any agent or representative which is not expressly confirmed by the Supplier in writing.

If despite this clause the Supplier is held to be liable to the Customer under these Terms for loss of any nature (including under contract and in negligence), the Supplier's total liability (i) will not include damages for indirect or consequential loss of any kind and (ii) will not exceed the price of the Goods and/or Services in relation to which that liability was incurred.

11. Default

If an event of default occurs, the Supplier may suspend or terminate any current or future Orders made between the Supplier and the Customer. If an event of default occurs, the price and any other amounts owing will immediately become due and payable to the Supplier notwithstanding that the due date has not arisen. Default interest will accrue on the daily balances of overdue accounts from the day following the due date to the day of payment (both dates inclusive) at a rate of 2.5% per month or part thereof, compounding.

The Supplier reserves the right to cancel or withhold any Orders from the Customer until all moneys owed by the Customer are paid to the Supplier. The Supplier may also recover any Goods where title has not yet passed to the Customer and the Supplier may withdraw any discount against trade list prices or that which has otherwise agreed to be provided.

For the purposes of this clause, an "event of default" means an event where the Customer fails to comply with these Terms or any other contract with the Supplier or any related company of the Supplier; where the Customer commits an act of bankruptcy or is unable to pay its debts as they fall due; where the Customer is deemed to be bankrupt or insolvent or where the Customer enters into any composition or arrangement with its creditors. Where the Customer is a company, an "event of default" occurs when the Customer commits any act or any event occurs in relation to it which exposes it to a risk of being put into liquidation or receivership; where a resolution is passed or proceedings commenced for the Customer to be wound up or liquidated; where a receiver or statutory or official manager or trustee is appointed over all or any of the Customer's assets, or ownership or effective control of the Customer is transferred without the prior written consent of the Supplier.

The Customer agrees to indemnify the Supplier for all costs that the Supplier may incur in connection with a default by the Customer under these Terms, including any legal costs (on a solicitor/client basis), any debt collection costs (including commissions) that become payable to any collection agency that the Supplier may choose to engage, in addition to any other costs that the Supplier may become liable for as a result of the default.

12. Privacy

Through conducting normal business, the Supplier may collect the Customer's personal information, such as purchase history, contact and delivery details. The Customer authorises the Supplier to collect, retain and use any information about the Customer for the purpose of enforcing any rights under these Terms, or marketing any goods provided by the Supplier to the Customer or any other party. Where the Customer is a natural person, the authorities are considered authorities or consents for the purposes of the Privacy Act 1993.

Where the Customer has provided information to the Supplier on a confidential basis, the Supplier will hold that information in confidence, except as required by law. The Customer has the right under the Privacy Act 1993 to obtain access to, and to request the correction of, any personal information concerning the Customer held by the Supplier.

The Customer acknowledges that the Supplier will communicate with the Customer (including by telephone, email and/or text message) for the purpose of performing the Supplier's obligations in connection with the Order.

13. Force majeure

The Supplier will not be liable for any failure or delay in complying with any obligation imposed by these terms and conditions if the failure or delay arises from any circumstance beyond the Supplier's control, including without limitation fire, flood, earthquake, explosion, war, insurrection, sabotage, industrial disputes, transportation embargo, changes in law, delays or disruption by government or government agencies, epidemics or pandemics.

If the delay continues for a period of 30 business days or more, either party may cancel the Order without liability to the other.

14. Miscellaneous

While the Supplier endeavours to supply correct information on the Supplier's website at all times, mistakes, errors or omissions may occur. The Supplier takes no responsibility for any loss or damage, direct or indirect, resulting from the use or application of information contained on the Supplier's website.

Failure by the Supplier to enforce any of the Terms contained herein shall not be deemed to be a waiver of any of the rights or obligations the Supplier may have under these Terms.

These Terms shall be governed and construed in accordance with the laws of New Zealand and the parties submit to the non-exclusive jurisdiction of the courts of New Zealand.

Where the Customer or any other person who the Customer acts for, or who the Customer permits to act for the Customer, supplies incorrect information for the purchase of Goods and the Supplier incurs cost in any matter concerning that name then the Supplier may recover the costs incurred by the Supplier from the Customer (including legal costs on a solicitor-client basis).

The Customer agrees to use the Supplier's website, products and services in accordance with the applicable laws of the country or countries where the Customer's business or organisation is based.

The singular shall include the plural and vice versa and words importing any gender shall include every other gender.

A "business day" means any day, other than a Saturday, Sunday or public holiday in New Plymouth, on which banks are generally open for business.

Unless any provision in these Terms expressly provides otherwise, these Terms are not intended to confer a benefit on any person or class of person who is not a party to it.

The Supplier may deliver notices to the Customer by sending them to an email address that the Customer has notified to the Supplier.

If anything in these Terms is unenforceable, illegal or void, then it is severed and the rest remains in force, unless the severance would change the underlying principal commercial purpose or effect.

The United Nations Convention on Contracts for the International Sale of Goods adopted at Vienna, Austria, on 10 April 1980 does not apply to the sale of Goods the subject of these Terms.

The Customer must not transfer its rights in respect of the purchase of Goods to any other party without the Supplier's prior consent in writing.

If the Supplier exercises or fails to exercise any right or remedy available to it, this will not prejudice the Supplier's rights in exercising that or any other right or remedy. Any waiver of any term of the contract into which these Terms are incorporated must be specified in writing and signed by an authorised officer of the Supplier.

Notes

Further developments of our products and technical changes are subject to change. Alterations, errors and errata constitute no claim for damages. Our valid sales terms and delivery conditions are available on our website www.jeanmueller.co.nz

Notes

Jean Müller NZ Ltd.
Unit 2, 37 Hurlstone Drive
PO Box 907
New Plymouth 4340
NEW ZEALAND

Phone 06 769 9694
Fax 06 769 9696

Website www.jeanmueller.co.nz

Version 20 - Published October 2020

10th year of servicing New Zealand and Pacific Island customers.